HOSPITAL



ANESTHESIA CARTS (IADE) SECURE TROLLEY WITH JOINT DRAWERS - MM3 (MOD'ALLI)

SOFT SOUND® · EASY CLIP® · NO KEY CONCEPT® · EASY MOV'®

Care and service equipment - Operating room

greenly 2024 Or Climate Strategy Rating TOP 5%

MKT-26-PO-HOP-SES-BOP-CHA-M3MCA-EN 21/11/2026

Summary

HAcare, specialist in medical devices since 1860. 3

HAcare Group's eco-responsible commitments 4

Choose the circular economy 5

Recyclable materials 6

Certifications 7

Anesthesia carts (IADE) Hospital Operating room 8

Our exclusives

- Soft Sound 10
- Easy Clip 11
- No key concept 12
- EasyMov and the motorized fifth wheel 13

Highlights

- Protect and lock (Joined drawers) 15
- Secure tray for reliable preparation (Work surface) 16
- Extendable shelf (Optimizing space) 17
- Accessory rail (Easy Clip) 18
- Easy CLEAN (Easy CLEAN) 19

Characteristics

- Mobility 21
- Safety 22
- Configurable ..... 23 - 24

Technical specifications 27

Options, Accessories, Components & Color Chart 30

Preventive maintenance tailored to your needs 40

The advantages of preventive maintenance 41

Our preventive maintenance services 42



HAcare, specialist in medical devices since 1860.

At HAcare, we design, manufacture and distribute medical devices and innovative, durable medical furniture solutions designed to improve the daily lives of patients and healthcare professionals alike.

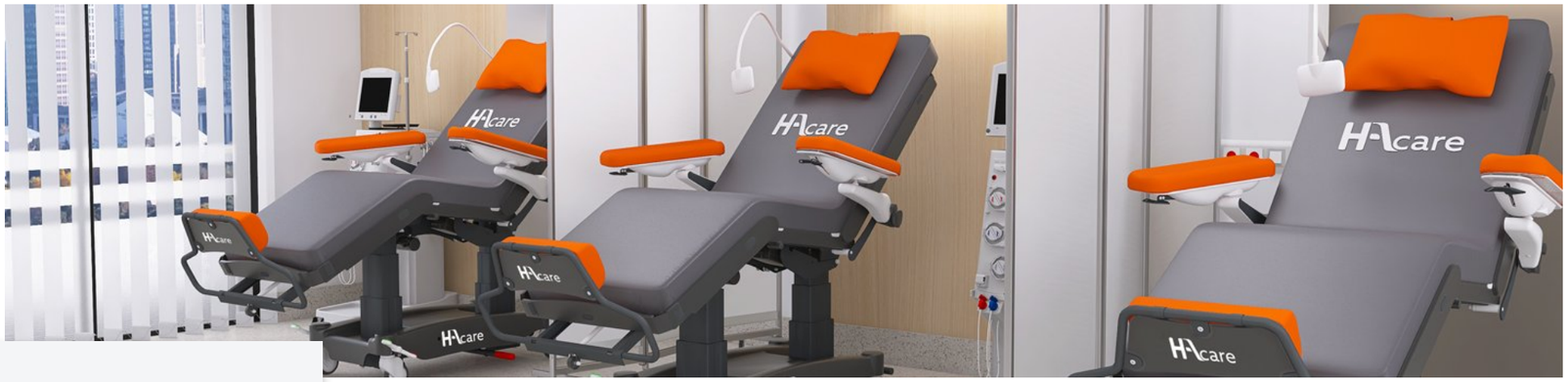









The HAcare Group's eco-responsible commitments

The HAcare group commits to an **eco-responsible industrial orientation**

In its sustainable development strategy, the HAcare group has defined a list of **6 commitments** that guide its **actions and decisions** since the group's creation and for the years to come.

Indicators have been set up for each commitment.

Our 6 commitments

- Made in France production
- The use of renewable resources
- Integrating the circular economy into all new product developments
- Responsible purchasing (supplier quality monitoring)
- Daily actions to respect and protect the environment
- Combating RSI and noise pollution through our products

Choose the circular economy



HAcare finished products can be recycled through a recovery circuit at the end customer's premises, for recycling with our partner supplier. As wood cannot be recycled ad infinitum because its fibers become too small or exhausted, wood waste is recovered and transformed into green energy.



The plant fiber boards used in the manufacture of HAcare products are 100% reclaimed wood. Each HAcare finished product bears an index revealing the proportion of plant fiber contained.



Recycling is the practice of recovering used materials from the waste stream, then incorporating these same materials into the manufacturing process. Each HAcare finished product carries an index revealing the proportion of recycled material it contains.



Recyclable materials

HAcare finished products are 95% recyclable. For example, the HAcare medical bed is entirely recyclable, except for the wheels and motors. Each bed can be dismantled to recover each material separately: plant fiber, metal, plastic.

PLANT FIBER



Recycled wood

The plant fiber boards used in the manufacture of HAcare Group products are:

100% reused wood

Reuse is one of the environmentally friendly processes. It involves, for example, leftovers from wood-processing companies (e.g. sawmill scraps, production offcuts...). But also by-products from activities such as sustainable forest management and slope maintenance.

100% FSC-certified wood

Recyclable with a partner supplier who, on a worldwide exclusive basis and since 2021, recycles MDF and HDF panels.No water consumption, nor green energy **biomass**.

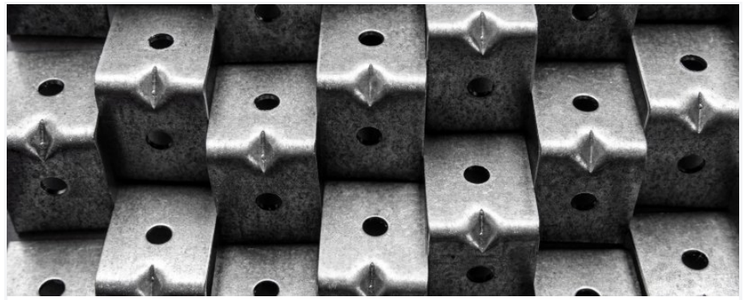

The metal

All metal components are **recyclable** and reusable, **infinitely**. Once the metal has been sorted, it is compressed, crushed, rolled and melted. It is then remolded into coils, bars or wire for reuse. This process can be endless!

Metal recycling has **many advantages**. It conserves natural resources by reducing the need for virgin materials, cuts energy consumption and reduces **greenhouse gas emissions**.



Recycled plastic

At recycling plants, waste (re) becomes a **raw material** through various processes: grinding, micronization, regeneration of plastics.

The recycled plastic will then be resold to **plasturgy** manufacturers in the form of **flakes**, powder or even **granules**.

Certifications



MANAGEMENT AND CUSTOMER SATISFACTION
ISO 9001

MEDICAL DEVICE
ISO 13485

GOLD | Top 5%
ecovadis
Sustainability Rating
MAY 2026

greenly
2024
Or
Climate Strategy Rating
TOP 5%

ANESTHESIA CARTS (IADE) HOSPITAL

Operating room

Secure trolley with joint drawers - MM3 (MOD'ALLI)





OUR EXCLUSIVES

OUR EXCLUSIVES

Soft Sound

Over the past 40 years, the average noise level in hospitals has increased by 15 decibels (dB), reaching levels of around 70 dB, well above the WHO recommended limit of 35 dB for a healthcare environment. HAcare products are designed to combat noise pollution. The goal is to reduce noise by 20 dB by adding shock absorbers to all rolling and stretcher-mounted structures.

SOFT SOUND®

Combating noise pollution

Anti-vibration support, high-performance **shock absorber**: for smooth, **quiet**, and comfortable **movement**, even when crossing thresholds or exiting elevators.
Noise pollution is significantly **reduced**.

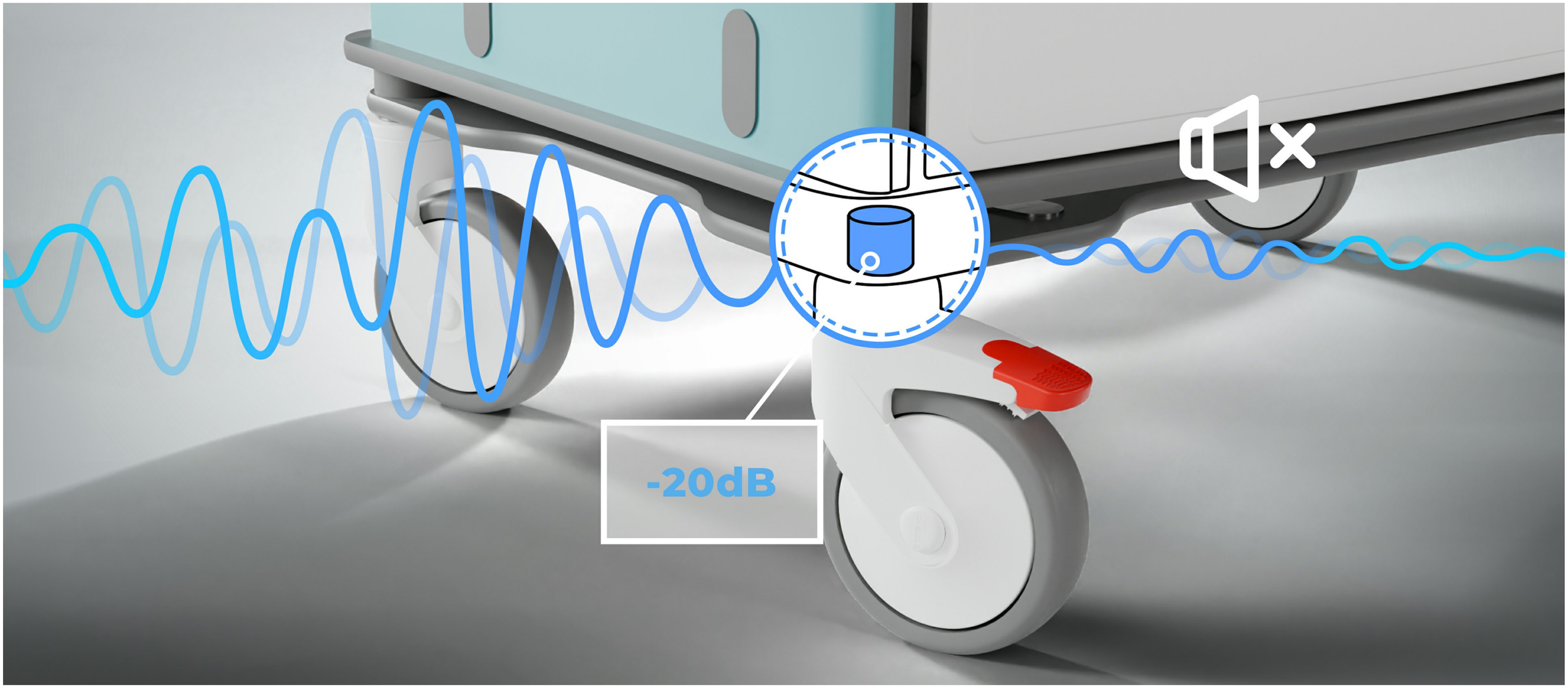

OUR EXCLUSIVES

Easy Clip

In a healthcare environment where every second counts and space is often limited, optimizing the treatment area becomes a strategic issue for improving the efficiency of healthcare teams and patient safety.

The EasyClip® concept was designed to address these constraints with an approach that is ergonomic, intuitive, and modular.

Optimize the treatment area

The accessories can be **attached** in a single step, **without any tools**, providing immediate time saving.
The **accessories** are fully **modular** and adapt to every need and every care situation, for **smoother** and **more efficient work** on a daily basis.

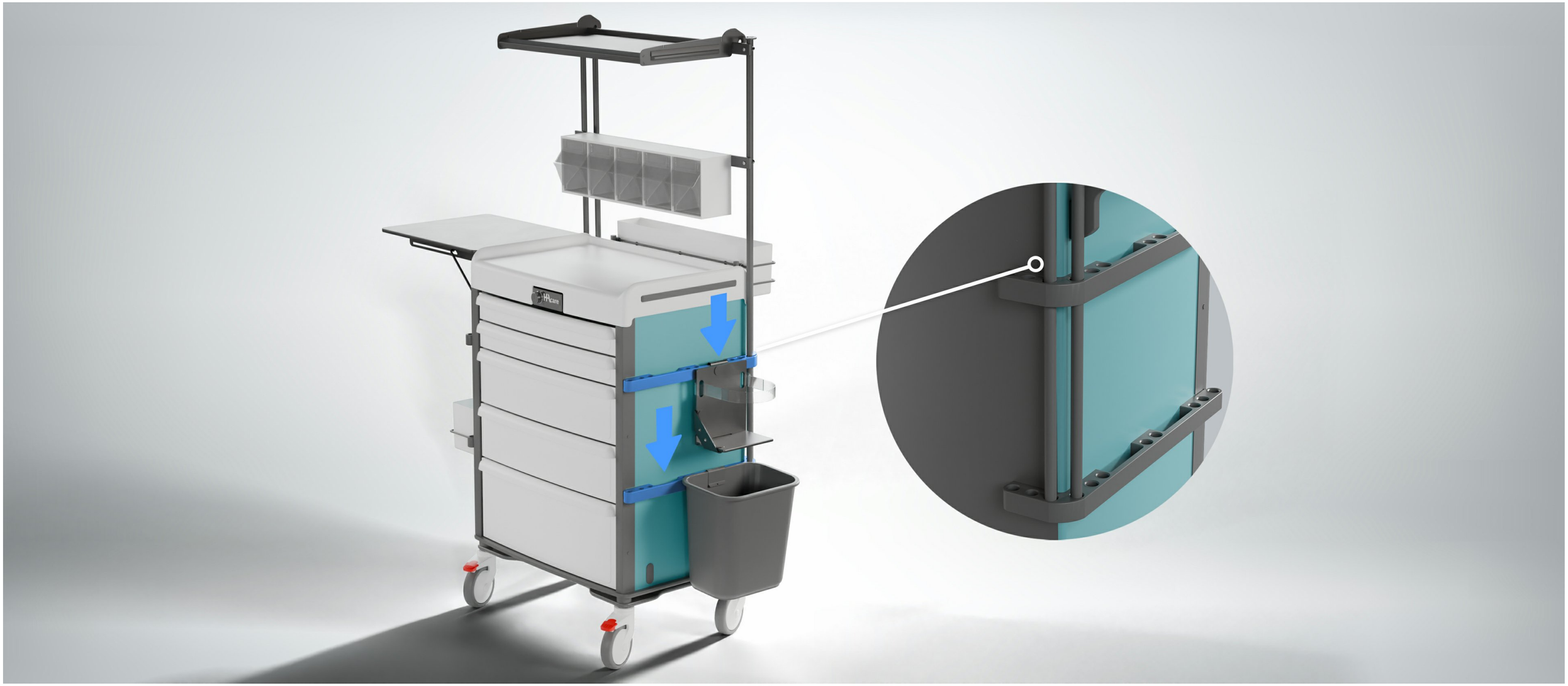

OUR EXCLUSIVES

No key concept

Locking healthcare carts is essential to ensure the safety of healthcare products and the traceability of procedures. Whether key-operated, electronic, or sealed, it protects the contents from unauthorized access and limits the risk of error or theft. Adapted to hospital requirements, this security system ensures fast and controlled access for authorized caregivers, enhancing compliance, confidentiality, and peace of mind in healthcare settings.

Secure storage

Electronic locks **with digital codes**, **RFID**, or **simple keys** for **security tailored** to each use. **RFID** offers **fast** and **secure access**, limiting access to **authorized personnel**. Traceability, reliability, and practicality for everyday use.



OUR EXCLUSIVES

EasyMov and the motorized fifth wheel

In a hospital environment under constant strain, handling heavy loads and moving stretchers are daily challenges for medical teams. Between overcrowded wards and narrow hallways, the risks of musculoskeletal disorders (MSDs) for staff and discomfort for patients are heightened. It was to address these challenges related to workplace health and the quality of patient care that the assisted transport solution was developed.

Motorization with the 5th wheel

The **motorization**, combined with a **5th swivel wheel,** offers excellent **maneuverability**.
It **makes** getting **around easier** with its **removable**, **lockable battery**, **20 km range**, and **forward/reverse throttle** equipped with an **electric brake.**

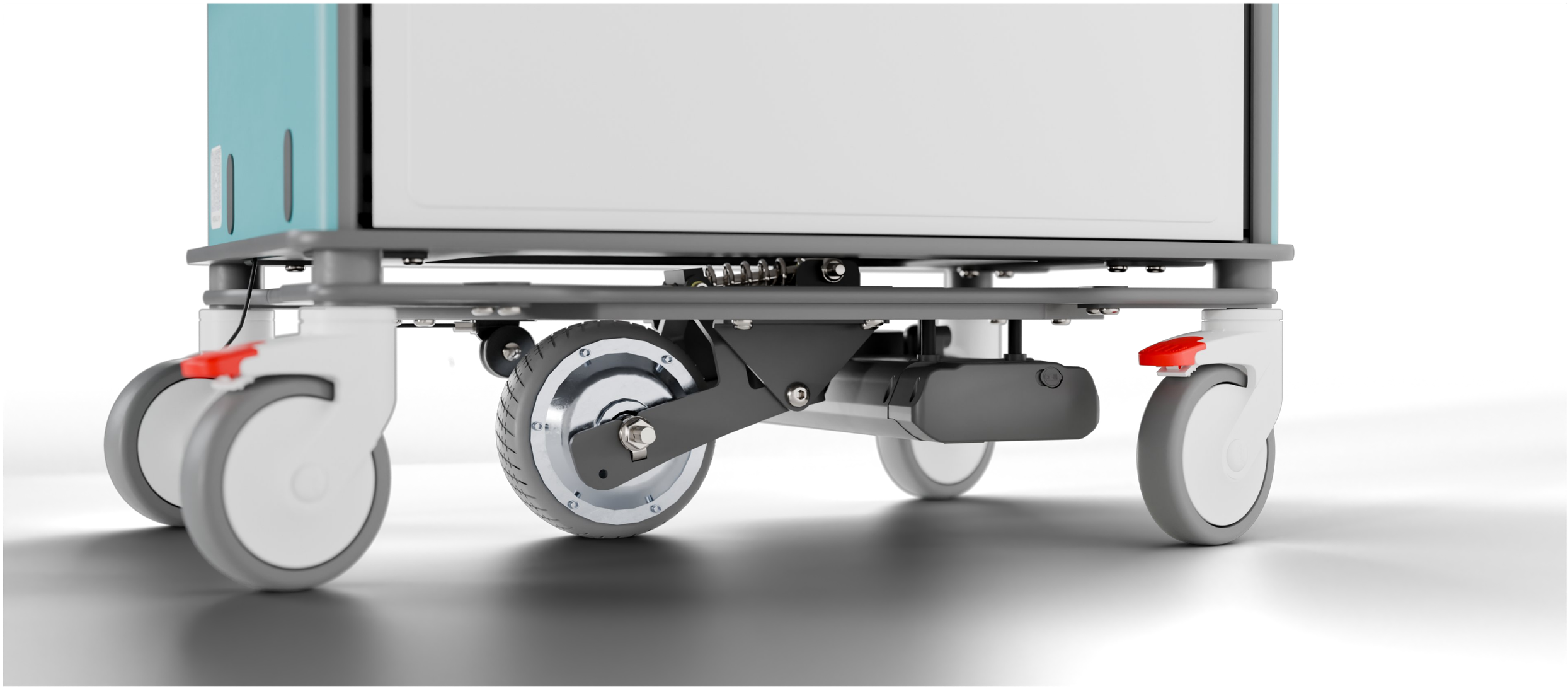



HIGHLIGHTS

Protect and lock (Joined drawers)

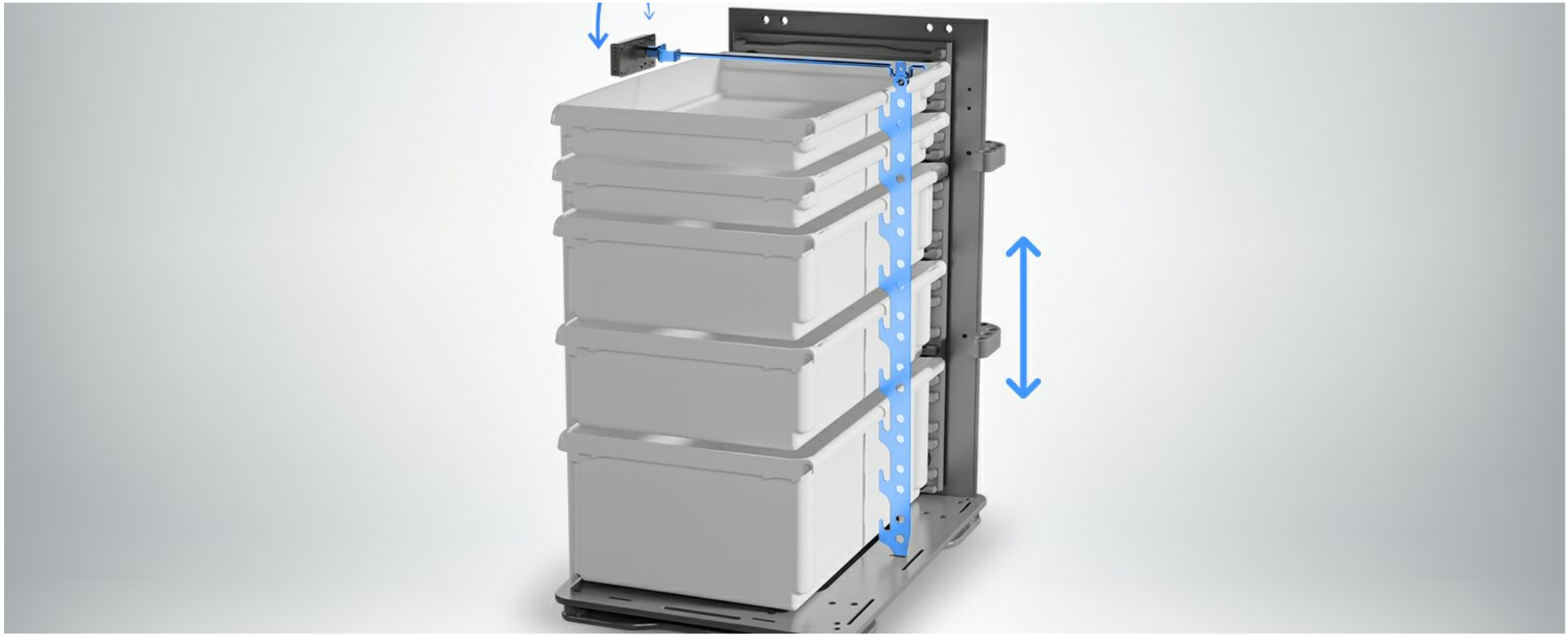

The **adjoining drawers protect** the contents of the drawers from prying **eyes**, **light**, and **UV** rays, thus preserving the **quality** and **confidentiality** of the stored products.

Thanks to the **centralized locking** system, opening and closing can be done **in a single step**, simplifying the work of staff while enhancing **security**.

A practical and reliable solution that combines protection, efficiency, and peace of mind on a daily basis.

HIGHLIGHTS

Secure tray for reliable preparation (Work surface)

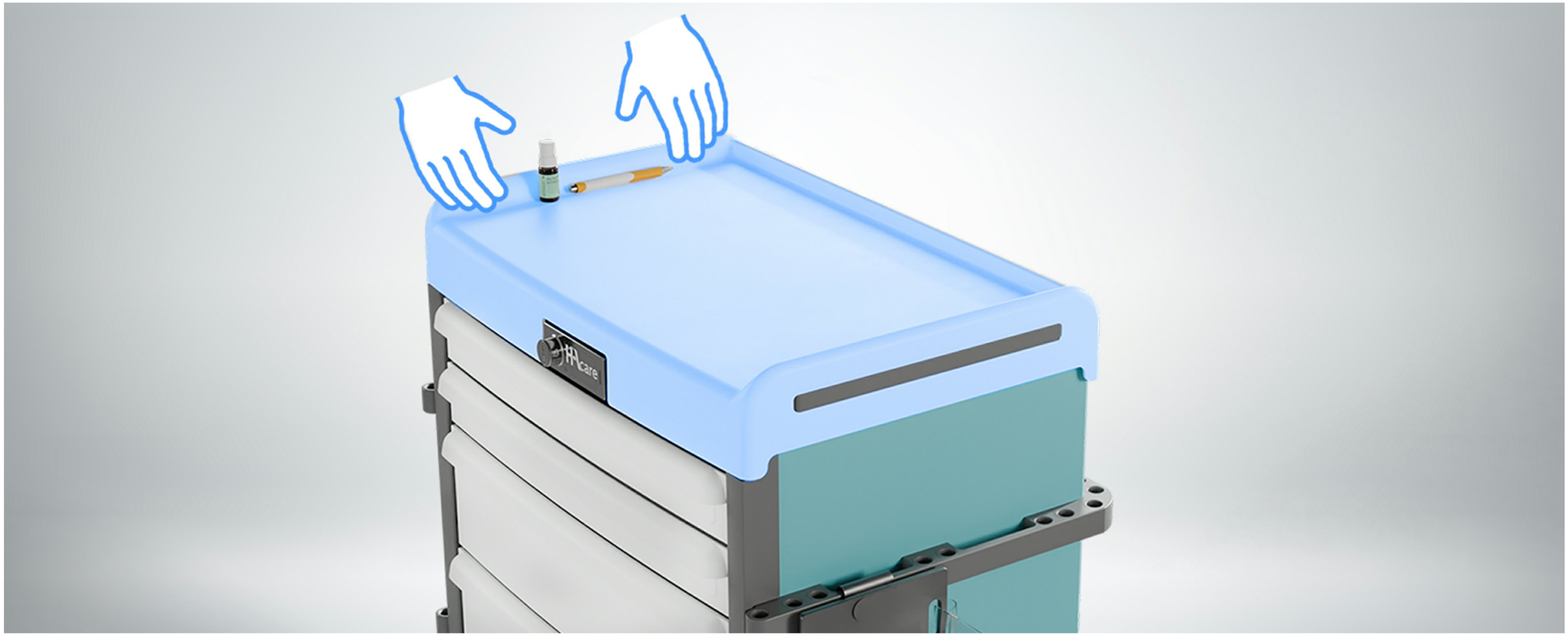

The medical furniture **tray** is designed with a **rim on three sides** to ensure **optimal safety** during treatment preparation. This design **prevents instruments** or **products from falling**, even when moving. Practical and ergonomic, it allows healthcare staff to work with confidence, with a **stable**, secure, and **easy-to-maintain workspace**. A design that combines safety, ease of use, and everyday efficiency.

Extendable shelf (Optimizing space)



The **sliding shelf** provides a practical **extension** of the **work surface**, ideal for optimizing space during treatment. Combined with peripheral Accessories, it **secures bottles** and **equipment** while keeping the main tray clear. The first drawer, dedicated to the keyboard and mouse, frees up even more preparation space. An STPO slot completes the set for ergonomic, fluid organization that is perfectly suited to demanding medical environments.

Accessory rail (Easy Clip)

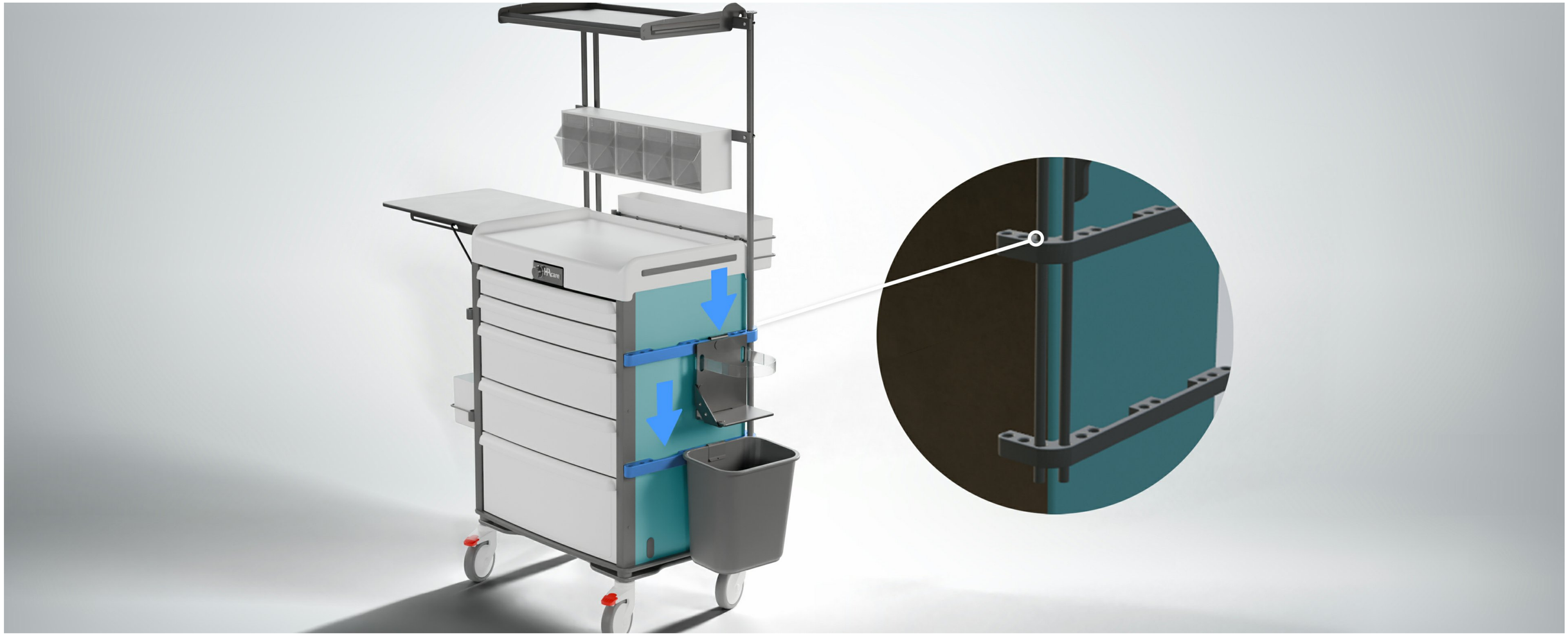

EASY CLIP

Choose your accessories based on the uses and needs of your department. Our **Easy Clip** concept allows for **easy installation** and **reorganization** on rails, **without any tools.** This allows you to gain efficiency and flexibility.

Easy CLEAN (Easy CLEAN)



Easy CLEAN



CHARACTERISTICS

CHARACTERISTICS

Mobility



EasyMOV

Designed to combine ease of use and performance, our medical furniture offers **optimal maneuverability** thanks to its **integrated** shock **absorber** system. This technology **absorbs vibrations** and unevenness in the floor, ensuring smooth, **safe**, and **effortless movement**, even in demanding hospital environments.

The push handle makes it easy **to grip**.

Every movement is made easier, reducing fatigue and protecting the health of users on a daily basis.

Designed to **limit musculoskeletal disorders** (MSDs), it allows caregivers to work in better ergonomic conditions, while ensuring the safety and stability of the equipment being transported.

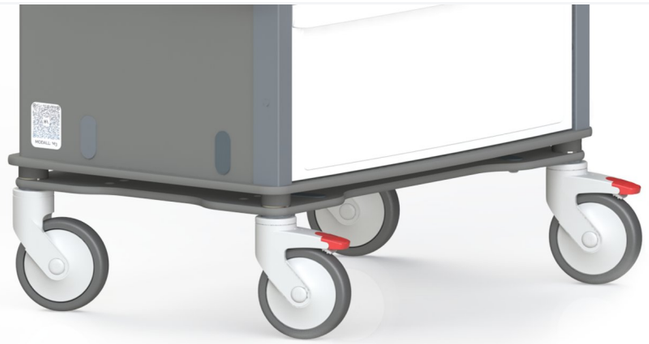

Choice of casters

The medical furniture adapts to any environment thanks to **a choice of** 75 mm or 125 mm **casters**, allowing for **optimal** adjustment of the work **surface height** and **ease of movement**.

The **two front brakes**, easily accessible by foot, ensure **perfect stability** during care or preparation, reinforcing the **safety** of the furniture and the confidence of caregivers in their actions.

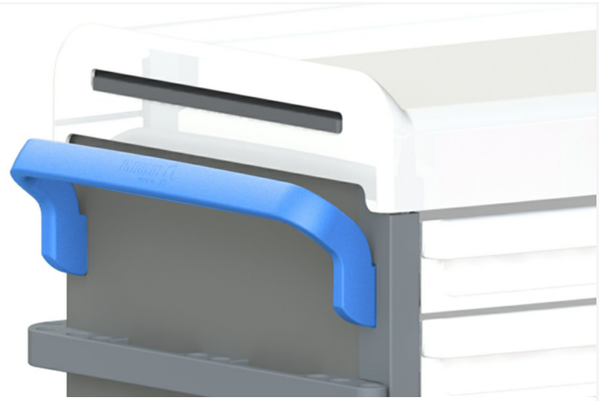

Push handles

Designed to combine ease of use and performance, our medical furniture offers **optimal maneuverability** and a **good grip** thanks to its **push handle**.

Its integrated shock absorber system makes it easy to move around.

Every **movement** is **smooth**, reducing fatigue and protecting the health of users on a daily basis.

Designed to **limit musculoskeletal disorders** (MSDs), it allows caregivers to work in better ergonomic conditions, while ensuring the safety and stability of the equipment being transported.

Safety



Digital code lock

The **digital code lock** offers **optimal security** and **simplified access management** for medical equipment. Unlike keys, the code guarantees reliable and quick locking, limiting the risk of loss or duplication.

It allows **precise control of access** to medications and medical devices, while improving **traceability** and **confidentiality**. Ideal for demanding hospital environments, it combines practicality, security, and compliance with healthcare protocols.



RFID locking

RFID locking ensures optimal security and **controlled access** to medical equipment. Using a **badge** or **personal card**, each opening is simple, quick, and **traceable**. It enhances **confidentiality**, limits unauthorized access, and is perfectly suited to demanding hospital environments, where fluidity and reliability are essential. A modern, secure, and ergonomic system for **simplified management** and **optimal control** of medical equipment.



Key lock

Key locks on medical furniture ensure reliable and accessible **security** for storing sensitive medications and equipment. **Easy to use**, they restrict unauthorized access while offering a **robust** and **proven solution**. Ideal for demanding hospital environments, they protect **contents**, enhance **confidentiality**, and contribute to compliance with **security protocols**. A practical and effective solution for securing equipment on a daily basis and facilitating the work of healthcare teams.

CHARACTERISTICS

Configurable



Optimize space

HACARE medical furniture adapts to every use thanks to a **wide range** of **modular components**. The P80 version optimizes care and offers **ample** storage **capacity**. **Compatible** with **standard drawers** and **trays**, it allows for clear and efficient organization. Ideal for **combining** adjoining drawers and standard shelves, it provides a **practical**, scalable, and efficient **workspace** for everyday use, meeting the needs of healthcare teams.

Its **compact size** is an asset in **the anesthesia room** or operating room.



Modularity according to use

The medical furniture offers **great modularity** for optimized storage: **small drawers** for small medical supplies (syringes, needles, etc.), **medium drawers** for compresses and infusion sets, and a **large drawer** for large-volume solutions. The **sliding shelf,** which is mainly used for administrative tasks, increases the work surface area and frees up space for preparation. A dedicated space for **IT equipment** optimizes and facilitates patient monitoring.

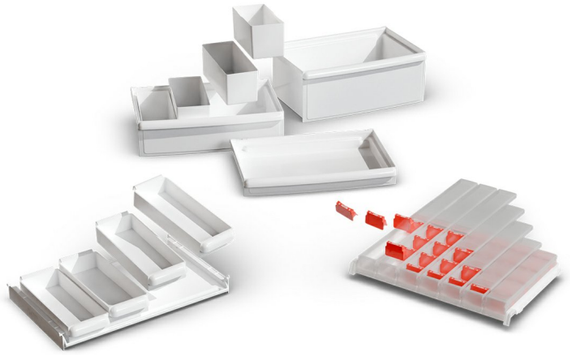

Choosing components for custom medical furniture

Configure your medical furniture according to your **needs** with a wide range of **modular components**. Create a **tailor-made solution that** is perfectly suited to your everyday use. Each element is designed to **optimize** your organization, your working **comfort**, and the **efficiency** of care, while ensuring optimal ergonomics. Complete customization for **furniture** that **is scalable, durable**, and perfectly suited to the requirements of your department.

CHARACTERISTICS

Configurable



Selecting "type" configurations

Thanks to **our expertise** in medical furniture, we design **"type" configurations** for every use. Careful selection of **components** and **Accessories**, optimized layout, ergonomics, and ease of use: everything is designed to meet the specific needs of each department. **Our team will help you** define the configuration best suited to your practices, combining functionality, durability, and everyday efficiency.



Choosing colors for medical furniture

Customize your hospital environment by choosing from a wide **range of colors**. Ideal for **differentiating spaces by department** or use and **facilitating orientation** for healthcare staff and patients.



The **adjoining drawers protect** the contents of the drawers **from** prying **eyes**, **light**, and **UV** rays, thus preserving the quality and **confidentiality** of the stored products.

Thanks to the **centralized locking** system, opening and closing can be done in **a single step**, simplifying the work of staff while enhancing security.
The **removable drawers** can be **cleaned in an autoclave**, and the **rounded corners** make cleaning easier.
A practical and reliable solution that combines protection, efficiency, and peace of mind on a daily basis.

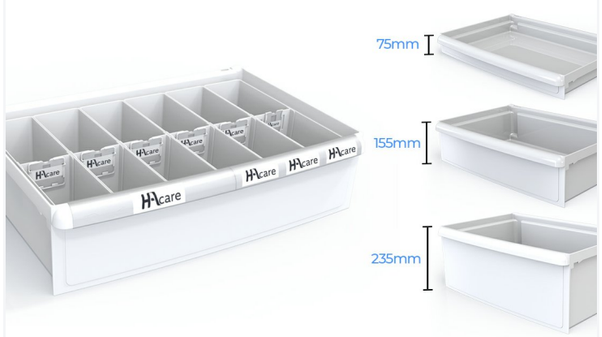

Ergonomic drawers

The medical furniture **adapts** to any healthcare organization thanks to its **customizable configurations**. Choose from three drawer heights and **freely configure** the interior layout to suit your needs.

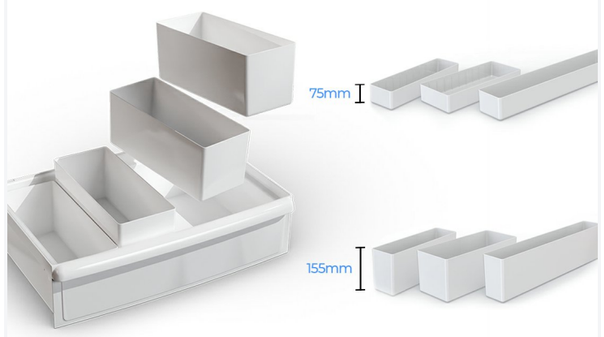

Separation bins

The medical furniture adapts to **any** healthcare **organization** thanks to its **customizable configurations.** Choose from three drawer heights and freely arrange the **interior layout** according to your needs with the **divider trays.**

A **flexible** and **scalable** design that **optimizes space,** improves ergonomics, and makes each care station more functional on a daily basis.

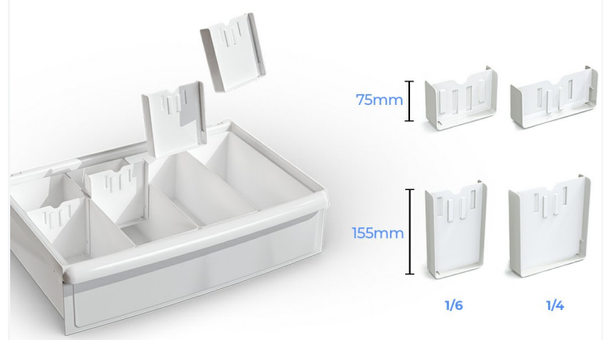

Separators

Freely **customize** the **interior layout** to suit your needs with dividers, **separators**, and subdivision boxes that isolate each care item for **greater safety**. A **flexible** and **scalable design** that **optimizes space**, improves ergonomics, and makes each care station more functional on a daily basis.

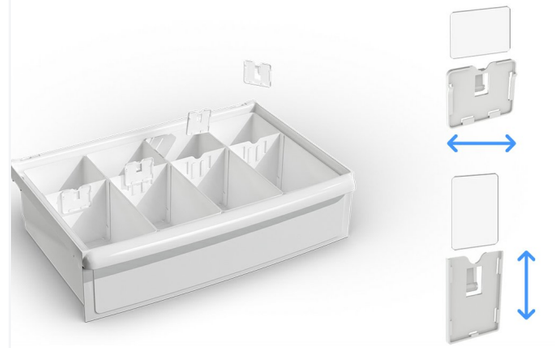

Label holders and labels

Label holders on medical furniture drawers facilitate **quick** and accurate **identification** of contents, **reducing errors** and optimizing **healthcare organization**. They enable **clear identification** of medications, medical devices, or supplies, thereby improving team **productivity** and **workflow**. Adaptable and **modular**, they contribute to a structured and **secure** care environment, while **simplifying** the **daily management** of equipment and enhancing the efficiency and safety of interventions.

Technical specifications

PP-M60009-ANV1

ANESTHESIA CART - MODALLI M3 - F600 9G - EQUIPPED ANV1

WEIGHT - ECO-PERFORMANCE

Weight bare structure	27,6 kg
Total Weight - Pack	42 kg
Plant-based pourcentage (on total weight)	60%
Percentage of recycled material	25%

DIMENSIONS

Width	78,2 cm
Depth	49,8 cm
Height tray	101,2 cm
Front	F600
Height	104,2 cm
Thickness	Box: 1 / Back: 0,6 cm

TYPE

Type of brake	Individual brake on the front castors

MATERIAL & COATING

Tray Structure	Top tray plastic ABS PMMA with 30 mm edge
Box	Vegetable fibers
Handles	PA6 with glass fibers
Wheels	Thermoplastic rubber, grey non-marking
Material	Easyfix rails in PA6 with glass fibers
Internal runner walls / Slides	Black plastic ABS

BASE

Type of footing	4 swivel wheels with 2 braked at the front
Wheels diameter	125 mm

TYPE OF ATTACHMENT

Internal runner walls / Slides	Fitting without tools by wing nut

SAFETY CHARGE

Maximum admissible load	100 kg

COLORS

Box	Colors to choose from in our selection

CAPACITY

Slides number (G height)	9G
Typ of springers	Mixed only
Mixed springers: Drawer height 75 mm	9
Mixed springers: ABS tray height 50 mm	8
Mixed springers: Shelf for Daily pillboxes medium model height 50 mm	9

FIRE CLASSIFICATION

Plastic	M2
ABS Plastic	M2
Vegetable fibers	D-s2d0

ADDITIONAL INFORMATION

Noise level generated by the moving product	42 db

COMPOSITION

- 2 drawers height 75
- 2 drawers height 155
- 1 drawer height 235
- wates bin 13L for sorted waste
- support for sharp container holder
- lateral storage unit 2 levels (without tray)

9G



OUR EXCLUSIVES

SOFT SOUND® · EASY CLIP® · NO KEY CONCEPT® · EASY MOV'®

HIGHLIGHTS

- Joined drawers
- Work surface
- Optimizing space
- Easy Clip
- Easy CLEAN

Technical specifications

PP-M60009-ANV2

ANESTHESIA CART - MODALLI M3 - F600 9G - EQUIPPED ANV2



9G

WEIGHT - ECO-PERFORMANCE

Weight bare structure	27,6 kg
Total Weight - Pack	55,8 kg
Plant-based pourcentage (on total weight)	60%
Percentage of recycled material	25%

DIMENSIONS

Width	110 cm
Depth	49,8 cm
Height tray	101,2 cm
Front	F600
Height	104,2 cm
Thickness	Box: 1 / Back: 0,6 cm

TYPE

Type of brake	Individual brake on the front castors

MATERIAL & COATING

Tray Structure	Top tray plastic ABS PMMA with 30 mm edge
Box	Vegetable fibers
Handles	PA6 with glass fibers
Wheels	Thermoplastic rubber, grey non-marking
Material	Easyfix rails in PA6 with glass fibers
Internal runner walls / Slides	Black plastic ABS

BASE

Type of footing	4 swivel wheels with 2 braked at the front
Wheels diameter	125 mm

TYPE OF ATTACHMENT

Internal runner walls / Slides	Fitting without tools by wing nut

SAFETY CHARGE

Maximum admissible load	100 kg

COLORS

Box	Colors to choose from in our selection

CAPACITY

Slides number (G height)	9G
Typ of springers	Mixed only
Mixed springers: Drawer height 75 mm	9
Mixed springers: ABS tray height 50 mm	8
Mixed springers: Shelf for Daily pillboxes medium model height 50 mm	9

FIRE CLASSIFICATION

Plastic	M2
ABS Plastic	M2
Vegetable fibers	D-s2d0

ADDITIONAL INFORMATION

Noise level generated by the moving product	42 db

COMPOSITION

- 2 drawers height 75
- 2 drawers height 155
- 1 drawer height 235
- overbridge unit 2 rails
- row of 4 tilting boxes
- row of 5 tilting boxes
- waste bin 13L for sorted waste
- support for sharp container holder

OUR EXCLUSIVES

SOFT SOUND® · EASY CLIP® · NO KEY CONCEPT® · EASY MOV'®

HIGHLIGHTS

- Joined drawers
- Work surface
- Optimizing space
- Easy Clip
- Easy CLEAN

Technical specifications

PP-M60009-ANV4

ANESTHESIA CART - MODALLI M3 - F600 9G - EQUIPPED ANV4



9G

WEIGHT - ECO-PERFORMANCE

Weight bare structure	27,6 kg
Total Weight - Pack	48,9 kg
Plant-based pourcentage (on total weight)	60%
Percentage of recycled material	25%

DIMENSIONS

Width	110,9 cm
Depth	50,1 cm
Height tray	101,2 cm
Front	F600
Height	165,8 cm
Thickness	Box: 1 / Back: 0,6 cm

TYPE

Type of brake	Individual brake on the front castors

MATERIAL & COATING

Tray Structure	Top tray plastic ABS PMMA with 30 mm edge
Box	Vegetable fibers
Handles	PA6 with glass fibers
Wheels	Thermoplastic rubber, grey non-marking
Material	Easyfix rails in PA6 with glass fibers
Internal runner walls / Slides	Black plastic ABS

BASE

Type of footing	4 swivel wheels with 2 braked at the front
Wheels diameter	125 mm

TYPE OF ATTACHMENT

Internal runner walls / Slides	Fitting without tools by wing nut

SAFETY CHARGE

Maximum admissible load	100 kg

COLORS

Box	Colors to choose from in our selection

CAPACITY

Slides number (G height)	9G
Typ of springers	Mixed only
Mixed springers: Drawer height 75 mm	9
Mixed springers: ABS tray height 50 mm	8
Mixed springers: Shelf for Daily pillboxes medium model height 50 mm	9

FIRE CLASSIFICATION

Plastic	M2
ABS Plastic	M2
Vegetable fibers	D-s2d0

ADDITIONAL INFORMATION

Noise level generated by the moving product	42 db

COMPOSITION

- 2 drawers height 75
- 2 drawers height 155
- 1 drawer height 235
- support for sharp container holder
- catheter container
- overbridge unit with shelf and a row of 5 tilting boxes

OUR EXCLUSIVES

SOFT SOUND® · EASY CLIP® · NO KEY CONCEPT® · EASY MOV'®

HIGHLIGHTS

- Joined drawers
- Work surface
- Optimizing space
- Easy Clip
- Easy CLEAN



OPTIONS, ACCESSORIES, COMPONENTS & COLOR CHART

Options

LOCK LOCKS

RFID CENTRAL LOCKING - FOR MODALLI M3

OP-M3RFID



LOCK LOCKS

DIGICODE CENTRAL LOCKING - FOR MODALLI M3

OP-M3CODE



LOCK LOCKS

MECHANICAL CENTRAL LOCKING - FOR MODALLI M3

OP-M3CLE



LOCK LOCKS

MASTER KEY FOR MECHANICAL CENTRAL LOCKING

OP-M3CLEPASS



LOCKING OPTIONS

10 RFID CARTS KIT POUR USERS

OP-KIT-BADGES-RFID



LOCKING OPTIONS

BATTERY KIT FOR CENTRAL LOCKING

OP-KIT-BATTERIE



LOCKING OPTIONS

MASTER USB KEY FOR CODE AND RFID CENTRAL LOCKING

OP-KIT-PASSE-USB-RFID



LOCKING OPTIONS

ADMINISTRATION KIT FOR RFID CENTRAL LOCKING

OP-KIT-ADMIN



LOCKING OPTIONS

MASTER USB KEY FOR DIGICODE AND RFID CENTRAL LOCKING

OP-KIT-PASSE-USB-CODE



WHEEL OPTIONS

CASTOR DIAMETER 125 MM - SINGLE CATOR - ANTISTATIC

OP-ROUE125AS



WHEEL OPTIONS

CASTOR DIAMETER 100 MM - DOUBLE ROLLER - SET OF 4

OP-ROUE100



WHEEL OPTIONS

CASTOR DIAMETER 75 MM - DOUBLE ROLLER

OP-ROUE075



ROUE MOTORISÉE

OPTION MOTORIZED WHEEL FOR FURNITURE M3

OP-M3EZGO



ROUE MOTORISÉE

OPTION WHEEL LIFT MECHANISM FOR FURNITURE M3 WITH MOTORIZED WHEEL

OP-M3DEB



COMPUTERIZATION

SECURED LAPTOP COMPARTMENT (CTSPO) - LOCK NOT INCLUDED - FOR MODALLI M3

OP-M3CTSPO



WORKTOP EXTENSION

SLIDING SHELF FITTED TO THE TRAY - FOR MODALLI M3

OP-M3TABL



IDENTIFICATION

CUSTOMIZABLE STICKER FOR IDENTIFICATION - IN OPTION

OP-ID



Accessories

CONTAINER HOLDER

FLANGE ACCESSORY WITH HOOK (COMP. V1, V2 & M3)

AC-M77892



CONTAINER HOLDER

PLASTER TRAY HOLDER ON EASY CLIP (DRAWER DIVIDER BIN 1/2 HEIGHT 155 NOT INCLUDED) (COMP. V2 & M ...

AC-SUPBACPLAT



CONTAINER HOLDER

OVERALL HOOK FLANGE ACCESSORY (COMP. V1, V2 & M3)

AC-M77929



CONTAINER HOLDER

LATERAL STORAGE UNIT 2 LEVELS (WITHOUT TRAY) (COMP. V1, V2 & M3)

AC-M21021SC



CONTAINER HOLDER

LATERAL STORAGE UNIT XL FOR GLOVE BOX (COMP. V1, V2 & M3)

AC-BOGANXL



CONTAINER HOLDER

DOUBLE WIRED BIN BAG HOLDER FOR SORTED WASTE DISPOSAL 2x13L (COMP. V2 & M3)

AC-M21066SI



CONTAINER HOLDER

CARDBOARD SUSPENSION FILES FOR FILE CONTAINER

AC-1014236



CONTAINER HOLDER

LATERAL STORAGE UNIT FOR GLOVE BOX (COMP. V1, V2 & M3)

AC-BOGAN



CONTAINER HOLDER

WASTE BIN 13L FOR SORTED WASTE (2X) (COMP. V1, V2 & M3)

AC-M77869



CONTAINER HOLDER

LATERAL STORAGE UNIT 1 LEVEL (TRAY 155 1/4 INCLUDED)

AC-M21020SC155



CONTAINER HOLDER

LATERAL STORAGE UNIT 1 LEVEL (TRAY 75 1/4 INCLUDED)

AC-M21020SC75



CONTAINER HOLDER

BACK WIRED BOTTLE HOLDER (WITHOUT TRAY) MOD'ALLI LOGIST'ALLI (COMP. V2 & M3)

AC-M21037SC

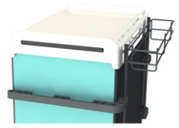

CONTAINER HOLDER

FRONT WIRED BOTTLE HOLDER (WITHOUT TRAY) LOGIST'ALLI (COMP. V2 & M3)

AC-M21037SCAV



CONTAINER HOLDER

LATERAL STORAGE UNIT 1 LEVEL (WITHOUT TRAY) (COMP. V1, V2 & M3)

AC-M21020SC



CONTAINER HOLDER

HYDRO ALCOHOLIC SOLUTION HOLDER - FOR 9G AND 10G CART

AC-GEL16



CONTAINER HOLDER

WIRED BIN BAG HOLDER FOR WASTE DISPOSAL 13L (COMP. V2 & M3)

AC-M21063SI



CONTAINER HOLDER

WASTE BIN 13L - VOLCANIC BLACK (COMP. V1, V2 & M3)

AC-M21028SC



CONTAINER HOLDER

STRAP IN TRANSLUCID ELASTOMER (COMP. V2 & M3)

AC-M21027SA

CONTAINER HOLDER

POLE CLAMP FOR WASTE BIN 13L

AC-PINCEPOUBELLE



CONTAINER HOLDER

WALL-MOUNTED FILE CONTAINER WITH HANDLES

AC-M18090I1A-M3



CONTAINER HOLDER

SUPPORT FOR SHARP CONTAINER HOLDER - VOLCANIC BLACK (COMP. M3)

AC-M21027NV-M3



Accessories

WORKTOP EXTENSION

FOLDING WRITING TABLET

AC-TAB-ECRITOIRE



COMPUTERIZATION

ACCESSORIES FOR SCREEN HANGING ON OVERBRIDGE UNIT WITH TILTING AND HEIGHT

AC-PLWER



COMPUTERIZATION

ACCESSORIES FOR SCREEN HANGING ON OVERBRIDGE UNIT WITH WESA 100/75 PLATE

AC-PLWE



COMPUTERIZATION

VOLCANIC BLACK SAFETY CABLE (COMP. V1 & V2)

AC-M77910



COMPUTERIZATION

6 SOCKET BLOCK WHITE MOUNTED (COMP. V1 & V2)

AC-M21041MZ

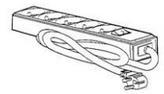

COMPUTERIZATION

LAPTOP ARM

AC-M77897SZ-TABLETTE



COMPUTERIZATION

VEGETABLE FIBERS PLATE FOR LAPTOP ARM

AC-M77941R-M3



COMPUTERIZATION

LAPTOP ARM FOR CART "WITHOUT OVERBRIDGE UNIT"

AC-M77897-PLAT-M3



EQUIPMENT

CONNECTING RAIL (2 PARTS)

AC-JONRAIL



EQUIPMENT

TROLLEY FOR DELIVERY ROOM / PAEDIATRICS CONSULTATION

AC-M21088MA



EQUIPMENT

ADHESIVE & MAGNETIC STRIP IN ALUMINIUM FOR RAIL (COMP. V1 & V2)

AC-M77942



EQUIPMENT

BLUE VELCRO TAP LENGTH 5M TO CUT

CO-M77885



CONTAINER HOLDER

ROW OF 3 GREY TILTING BOXES WITH FASTENERS FOR RAIL

AC-BB3



CONTAINER HOLDER

ROW OF 4 GREY TILTING BOXES WITH FASTENERS FOR RAIL

AC-M77881



CONTAINER HOLDER

ROW OF 6 GREY TILTING BOXES WITH FASTENERS FOR RAIL

AC-M77883



CONTAINER HOLDER

ROW OF 5 GREY TILTING BOXES WITH FASTENERS FOR RAIL

AC-M77882



CONTAINER HOLDER

FLANGE WITH 6 HOOKS FOR OVERBRIDGE UNIT AND EASYCLIP RAIL

AC-SUP5C



GANTRY

VOLCANIC BLACK OVERBRIDGE UNIT 2 RAILS (COMP. V2)

AC-M2103301



GANTRY

SHELF FOR OVERBRIDGE UNIT

AC-ETAGERE-PORT

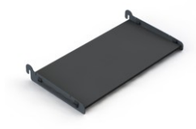

GANTRY

OVERBRIDGE UNIT - 2 RAILS

AC-PORT-2-RAILS



GANTRY

OVERBRIDGE UNIT - 2 SHELVES

AC-PORT-2-ETAG



Accessories

GANTRY

OVERBRIDGE UNIT - 1 RAIL 1 SHELF

AC-PORT-RAIL-ETAG



GANTRY

ADJUSTABLE RAIL FOR OVERBRIDGE UNIT

AC-RAIL-REG



GANTRY

OVERBRIDGE UNIT - 2 RAILS WITH ADJUSTABLE HEIGHT

AC-PORT-2-RAILSREG



GANTRY

OVERBRIDGE UNIT WITH COMPUTER SUPPORT

AC-M21031INF-M3



GANTRY

RAIL POUR BAC A BEC

AC-RAIL-BEC



Composants

BAC A BEC

BAC À BEC - VOLUME 1 LITRE

CO-BEC001



BAC A BEC

BAC À BEC - VOLUME 3,5 LITRES

CO-BEC003



BAC A BEC

BAC À BEC - VOLUME 10 LITRES

CO-BEC010



DRAWER

DRAWER EQUIPMENT FOR WHITE HANGING FILES

CO-M21022MC



DRAWER

WHITE DRAWER HEIGHT 235

CO-M24504MC



DRAWER

WHITE DRAWER HEIGHT 155

CO-M24503MC



DRAWER

WHITE DRAWER HEIGHT 075

CO-M24502MC



DRAWER COMBS

WHITE SEPARATOR DRAWER - - HEIGHT 235 - LONG

CO-M46027F6



DRAWER COMBS

WHITE SEPARATOR DRAWER - - HEIGHT 235 - SHORT

CO-M46028F6

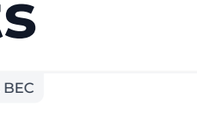

DRAWER COMBS

WHITE SEPARATOR DRAWER - - HEIGHT 075 - LONG

CO-M46034F6

DRAWER COMBS

WHITE SEPARATOR DRAWER - - HEIGHT 075 - SHORT - PETER'S SPECIAL

CO-PCP0570

DRAWER COMBS

WHITE SEPARATOR DRAWER - - HEIGHT 155 - LONG

CO-M46029F6

DRAWER COMBS

WHITE SEPARATOR DRAWER - - HEIGHT 075 - SHORT

CO-M46035F6

DRAWER COMBS

WHITE SEPARATOR DRAWER - - HEIGHT 155 - SHORT

CO-M46030F6



DRAWER BIN

WHITE DRAWER DIVIDER BIN 075 1/2

CO-M77888



DRAWER BIN

WHITE DRAWER DIVIDER BIN 155 1/4

CO-M24508MC



DRAWER BIN

WHITE DRAWER DIVIDER BIN 155 1/2

CO-M77889



DRAWER BIN

WHITE DRAWER DIVIDER BIN 075 1/6

CO-M24506MC



DRAWER BIN

WHITE DRAWER DIVIDER BIN 075 1/4

CO-M24507MC



SEPARATION BIN

WHITE DRAWER DIVIDER HEIGHT 120 1/6 WITH SMOOTH HANDLE

CO-M24523MPL



SEPARATION BIN

WHITE DRAWER DIVIDER HEIGHT 120 1/6 WITH HANDLE

CO-M24523MP



Composants

SEPARATION BIN

WHITE DRAWER DIVIDER HEIGHT 155 1/2

CO-M77887



SEPARATION BIN

WHITE DRAWER DIVIDER HEIGHT 075 1/2

CO-M77886



SEPARATION BIN

WHITE DRAWER DIVIDER HEIGHT 155 1/4 L

CO-M24522MC



SEPARATION BIN

WHITE DRAWER DIVIDER HEIGHT 075 1/6 WITH HANDLE

CO-M24509MP



SEPARATION BIN

WHITE DRAWER DIVIDER HEIGHT 075 1/4 L WITH HANDLE

CO-M24510MP



SEPARATION BIN

WHITE DRAWER DIVIDER HEIGHT 075 1/4

CO-M24510MC



SEPARATION BIN

WHITE DRAWER DIVIDER HEIGHT 075 1/4 L

CO-M24512MC



SEPARATION BIN

WHITE DRAWER DIVIDER HEIGHT 155 1/6

CO-M24523MC



SEPARATION BIN

WHITE DRAWER DIVIDER HEIGHT 155 1/4

CO-M24511MC



SEPARATION BIN

WHITE DRAWER DIVIDER HEIGHT 075 1/6

CO-M24509MC



DIVIDERS

MOBILE WHITE SEPARATOR HEIGHT 075 1/6

CO-M24513MC



DIVIDERS

MOBILE WHITE SEPARATOR HEIGHT 075 1/4

CO-M24514MC



DIVIDERS

CONNECTING BAR FOR WHITE MOBILE SEPARATOR (TRAY SEP.)

CO-M24526MC



DIVIDERS

MOBILE WHITE SEPARATOR HEIGHT 155 1/4

CO-M24515MC



DIVIDERS

MOBILE WHITE SEPARATOR HEIGHT 155 1/6

CO-M24525MC



DIVIDERS

CONNECTING BAR FOR WHITE MOBILE SEPARATOR

CO-M24530MC



DIVIDERS

WHITE MOBILE SEPARATOR HEIGHT 120 1/6 FOR DRAWER DIVIDER 120/6 WITH HANDLE

CO-M24525MS



SUBDIVISION BIN

WHITE SUBDIVISION BOX - HEIGHT 155 1/8

CO-M24620MC



SUBDIVISION BIN

WHITE SUBDIVISION BOX - HEIGHT 075 1/18

CO-M24615MC



SUBDIVISION BIN

WHITE SUBDIVISION BOX - HEIGHT 075 1/12

CO-M24617MC



SUBDIVISION BIN

WHITE SUBDIVISION BOX - HEIGHT 075 1/8

CO-M24618MC



Composants

LABEL HOLDER / DRAWER LABEL ...

WHITE CARD LABEL HOLDER - LENGTH 160 (X100)

CO-M77915

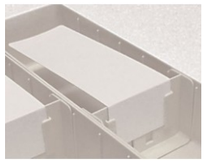

LABEL HOLDER / DRAWER LABEL ...

WHITE CARD LABEL HOLDER - LENGTH 160 (X100)

CO-M77915

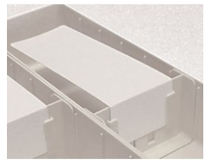

LABEL HOLDER / DRAWER LABEL ...

WHITE CARD LABEL HOLDER - 2 SLOTS - LENGTH 80 (X100)

CO-M77906

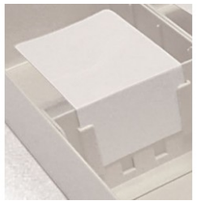

LABEL HOLDER / DRAWER LABEL ...

WHITE CARD LABEL HOLDER - 2 SLOTS - LENGTH 80 (X100)

CO-M77906

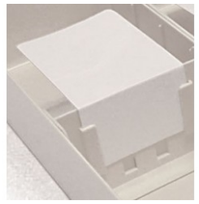

LABEL HOLDER / DRAWER LABEL ...

WHITE CARD LABEL HOLDER - 1 SLOT - LENGTH 40 (X100)

CO-M77905



LABEL HOLDER / DRAWER LABEL ...

WHITE CARD LABEL HOLDER - 1 SLOT - LENGTH 40 (X100)

CO-M77905



LABEL HOLDER / DRAWER LABEL ...

VERTICAL LABEL HOLDER (X50)

CO-M24534V



LABEL HOLDER / DRAWER LABEL ...

VERTICAL LABEL HOLDER (X50)

CO-M24534V



LABEL HOLDER / DRAWER LABEL ...

HORIZONTAL LABEL HOLDER (X50)

CO-M24534MZ



LABEL HOLDER / DRAWER LABEL ...

HORIZONTAL LABEL HOLDER (X50)

CO-M24534MZ



LABEL HOLDER / DRAWER LABEL ...

LABEL HOLDER FOR DRAWER 1/6

CO-M24610MZ



LABEL HOLDER / DRAWER LABEL ...

LABEL HOLDER FOR DRAWER 1/6

CO-M24610MZ



LABEL HOLDER / DRAWER LABEL ...

LABEL HOLDER FOR DRAWER 1/4

CO-M24611MZ



LABEL HOLDER / DRAWER LABEL ...

LABEL HOLDER FOR DRAWER 1/4

CO-M24611MZ



LABEL HOLDER / DRAWER LABEL ...

LABEL HOLDER FOR DRAWER 1/2

CO-M77815



LABEL HOLDER / DRAWER LABEL ...

LABEL HOLDER FOR DRAWER 1/2

CO-M77815



LABEL HOLDER / DRAWER LABEL ...

WHITE LABEL HOLDER 80 X 50 MM

CO-M24535SZ



LABEL HOLDER / DRAWER LABEL ...

WHITE LABEL HOLDER 80 X 50 MM

CO-M24535SZ



DRAWER LABELS

BLUE LABELS (X5)

CO-M77826



DRAWER LABELS

YELLOW LABELS (X5)

CO-M77825



DRAWER LABELS

RED LABELS (X5)

CO-M77827



Composants

DRAWER LABELS

GREEN LABELS (X5)

CO-M77828



DRAWER LABELS

WHITE LABELS FOR SUBDIVISION BOX

CO-M24532MC



DAILY BAC

PILULIER SEUL WITH COUVERCLE FOR DRAWERS JOINTIFS

CO-MED038



LABEL HOLDERS / MISCELLANEOU ...

SELF-ADHESIVE COVER A4 (X5)

CO-M77859



LABEL HOLDERS / MISCELLANEOU ...

SELF-ADHESIVE SUPPORT FOR LABEL HOLDER (X5)

CO-M77880

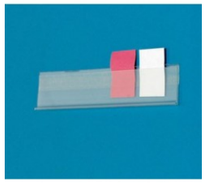

Color chart

Designs



EXOTIQUE BLEU



PLUM PURPLE



QUARTZ



LIMON



RED CANDY



RICE PAPER

Preventive maintenance tailored to your needs

The maintenance of medical devices is not only a **technical obligation**, but also a **legal** and regulatory responsibility of the organisation.

It is based on:

- A clear policy
- Traceability procedures
- The use of compliant parts
- And staff training

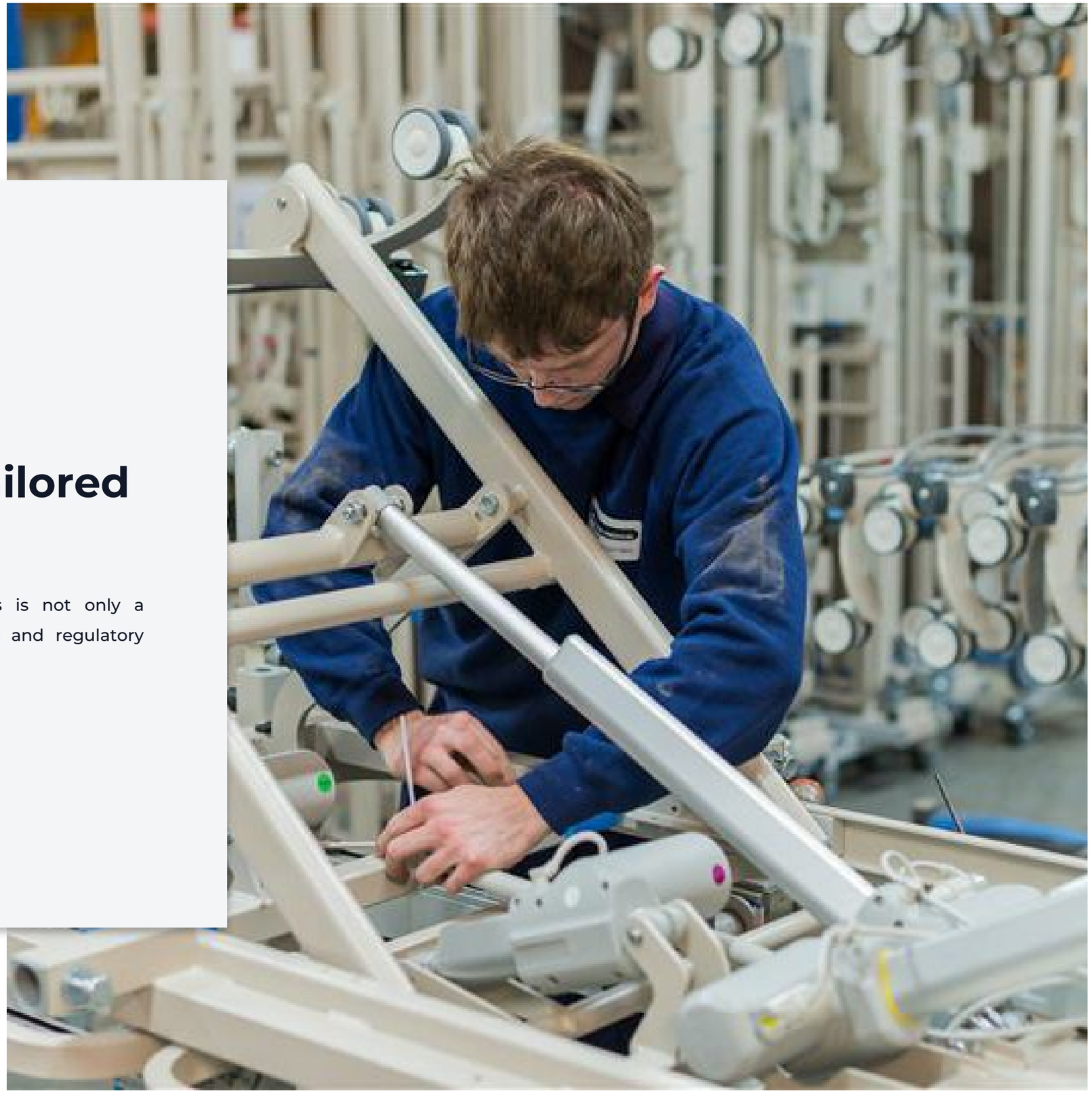

The advantages of preventive maintenance



THE BENEFITS OF REGULAR MAINTENANCE OF YOUR EQUIPMENT

- Improved performance: maximum fleet availability.
- Improved quality: a reliable and continuous service.
- Lower costs: reduced repair costs.
- Fewer breakdowns: continuity guaranteed.



EXTEND THE LIFESPAN OF YOUR EQUIPMENT & ENSURE SAFETY

Our maintenance programmes are designed to:
- Ensure your equipment performs to its full potential.
- Provide regular checks and reliable diagnostics.
- Safeguard the safety of patients, residents and carers.
- Maintain your organisation’s regulatory compliance.



A BUDGET UNDER CONTROL

Our maintenance solutions help you to:
- Plan your expenditure.
- Avoid unexpected costs.
- Optimise your investments with complete transparency.



CERTIFIED COMPONENTS FOR SUSTAINABLE VIABILITY

All our services are carried out using original parts that have been tested and approved, guaranteeing:
- Maximum safety when using your equipment.
- Strict compliance with regulatory standards.
- The durability and reliability of your beds, mattresses and accessories.

Our preventive maintenance services



A SINGLE POINT OF CONTACT FOR A COMPREHENSIVE SOLUTION

From pre-sales to after-sales, we support you every step of the way.

Through a **detailed analysis** of your needs, we provide **tailored technical support**, based on a **long-term** and **effective** partnership.

EXPERTS AT YOUR SIDE

Our technicians and engineers, who receive regular training in the latest innovations, guarantee you:
- A responsive, high-quality service.
- Professional installation of your equipment.
- Comprehensive training for your teams, delivered directly on-site.

OUR TECHNICIANS CARRY OUT A FULL INSPECTION

- Mechanical inspection: assembly, joints, brakes, locking mechanisms.
- Electrical inspection: components, controls, sensors.
- Safety features: barriers, locking systems, protective devices.
- Lubrication: re-greasing of all pivot points.
- Electrical tests: carried out in accordance with current standards.

Each operation (inspection, adjustment, replacement) is recorded in the technician’s maintenance report.

RENOVATION OF THE PARK

Following the visit, our preventive maintenance team will email you the **maintenance report** completed for each piece of equipment.
The **service reports** are sent to your HAcare contact, who will draw up the necessary quotes for repairs or replacements.

This provides you with **comprehensive** and **transparent** tracking of the **maintenance** of your equipment fleet.

The result: a clear and traceable process that guarantees the safety, compliance and availability of your equipment. Translated with DeepL.com (free version)

ALLIBERT MÉDICAL

ZAC de Fourquevaux, 100 avenue du Formans
01600 - TRÉVOUX, FRANCE

Tél +33 (0)4 74 08 71 71
export@hacare.com

Sales in the French Overseas Departments and Communities (DROM-COM)
f.milloux@hacare.com
06 25 83 86 00

International Export Department
export@hacare.com
+33 (0)4 74 08 71 71

Sales assistant
export@hacare.com
+33 (0)4 74 08 71 71

HAcare

MEDICAL

1860

MKT-26-PO-HOP-SES-BOP-CHA-M3MCA-EN
2026