# HOSPITAL



## ISOLATION CARTS ISOLATION CART - MM1 (TOP MOVING RAIL)

EASY CLEAN®

EASY CLIP®

**Care and service equipment** - Operating room

greenly 2024 Or Climate Strategy Rating TOP 5%

MKT-26-PO-HOP-SES-BOP-CDI-MMRMH-EN 21/1/2026

# Summary


**HAcare, specialist in medical devices since 1860.** ..... 3

**HAcare Group's eco-responsible commitments** ..... 4

**Choose the circular economy** ..... 5

**Recyclable materials** ..... 6

**Certifications** ..... 7

**Isolation carts Hospital Operating room** ..... 8

**Our exclusives**

- Easy CLEAN ..... 10
- Easy Clip ..... 11

**Highlights**

- Optimize space (Configurable) ..... 13
- Choosing components for custom medical furniture (Configurable) ..... 14

**Characteristics**

- Dedicated configurations ..... 16
- COMPOSANTS : Bac à lèvres ..... 17 - 18
- COMPOSANTS: Étagères ..... 19 - 20

**Technical specifications** ..... 21

**Preventive maintenance tailored to your needs** ..... 24

**The advantages of preventive maintenance** ..... 25

**Our preventive maintenance services** ..... 26




# HAcare, specialist in medical devices since 1860.

At HAcare, we design, manufacture and distribute medical devices and innovative, durable medical furniture solutions designed to improve the daily lives of patients and healthcare professionals alike.

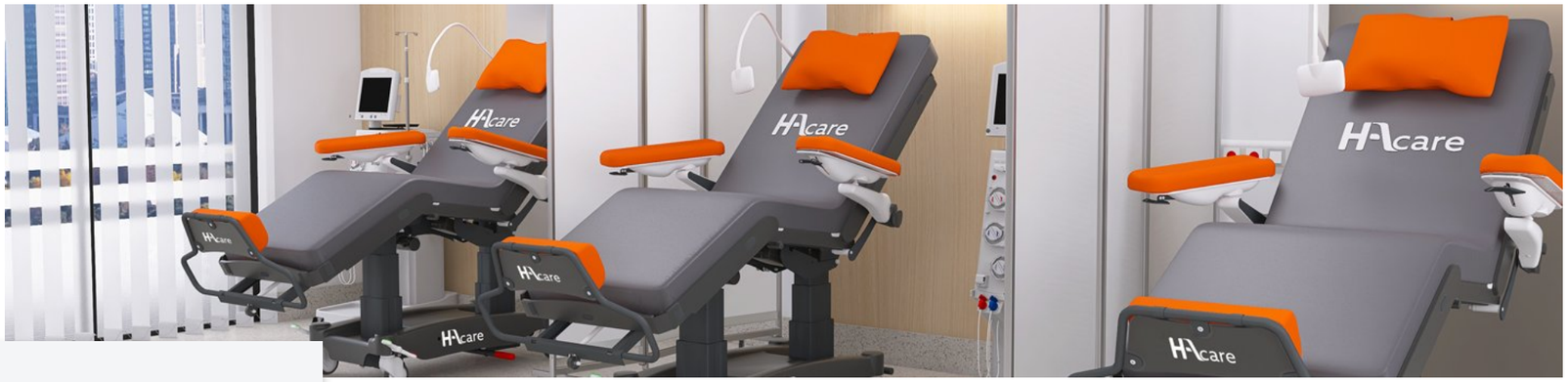









# The HAcare Group's eco-responsible commitments

The HAcare group commits to an **eco-responsible industrial orientation**

In its sustainable development strategy, the HAcare group has defined a list of **6 commitments** that guide its **actions and decisions** since the group's creation and for the years to come.

Indicators have been set up for each commitment.

## Our 6 commitments

- Made in France production
- The use of renewable resources
- Integrating the circular economy into all new product developments
- Responsible purchasing (supplier quality monitoring)
- Daily actions to respect and protect the environment
- Combating RSI and noise pollution through our products

# Choose the circular economy




HAcare finished products can be recycled through a recovery circuit at the end customer's premises, for recycling with our partner supplier. As wood cannot be recycled ad infinitum because its fibers become too small or exhausted, wood waste is recovered and transformed into green energy.




The plant fiber boards used in the manufacture of HAcare products are 100% reclaimed wood. Each HAcare finished product bears an index revealing the proportion of plant fiber contained.




Recycling is the practice of recovering used materials from the waste stream, then incorporating these same materials into the manufacturing process. Each HAcare finished product carries an index revealing the proportion of recycled material it contains.



# Recyclable materials

HAcare finished products are 95% recyclable. For example, the HAcare medical bed is entirely recyclable, except for the wheels and motors. Each bed can be dismantled to recover each material separately: plant fiber, metal, plastic.

PLANT FIBER



## Recycled wood

The plant fiber boards used in the manufacture of HAcare Group products are:

**100% reused wood**

Reuse is one of the environmentally friendly processes. It involves, for example, leftovers from wood-processing companies (e.g. sawmill scraps, production offcuts...). But also by-products from activities such as sustainable forest management and slope maintenance.

**100% FSC-certified wood**

Recyclable with a partner supplier who, on a worldwide exclusive basis and since 2021, recycles MDF and HDF panels.No water consumption, nor green energy **biomass**.

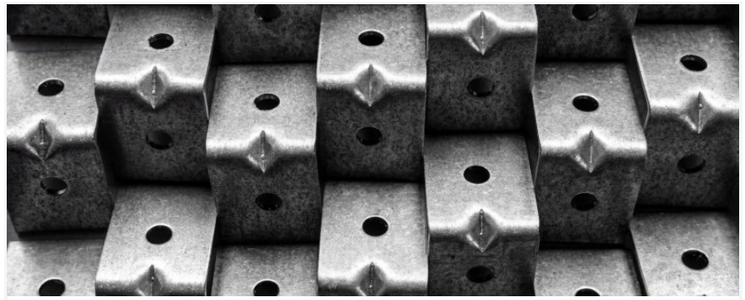

## The metal

All metal components are **recyclable** and reusable, **infinitely**. Once the metal has been sorted, it is compressed, crushed, rolled and melted. It is then remolded into coils, bars or wire for reuse. This process can be endless!

Metal recycling has **many advantages**. It conserves natural resources by reducing the need for virgin materials, cuts energy consumption and reduces **greenhouse gas emissions**.



## Recycled plastic

At recycling plants, waste (re) becomes a **raw material** through various processes: grinding, micronization, regeneration of plastics.

The recycled plastic will then be resold to **plasturgy** manufacturers in the form of **flakes**, powder or even **granules**.

# Certifications




MANAGEMENT AND CUSTOMER SATISFACTION
ISO 9001

MEDICAL DEVICE
ISO 13485

GOLD | Top 5%
ecovadis
Sustainability Rating
MAY 2026

greenly
2024
Or
Climate Strategy Rating
TOP 5%

# ISOLATION CARTS HOSPITAL

## Operating room

Isolation Cart - MM1 (TOP MOVING RAIL)





# OUR EXCLUSIVES

OUR EXCLUSIVES

# Easy CLEAN

*In a hospital setting where hygiene is an absolute imperative, every minute spent cleaning counts. Healthcare staff are faced with the need to ensure rigorous disinfection while maintaining a sustained pace of work. The EasyClean® solution addresses this challenge by making cleaning easier. Hygiene protocols are followed without compromise, while reducing the workload for staff. The result: less effort, less time wasted, and enhanced safety for both patients and caregivers.*

*EasyClean® guarantees a cleaner, safer, and more ergonomic environment, promoting quality care and comfort at work.*

EASY CLEAN®

## Make cleaning easier

**Tool-free disassembly** for quick and thorough cleaning, prevents any retention for **perfect hygiene** and real **time saving** for nursing staff.



OUR EXCLUSIVES

# Easy Clip

*In a healthcare environment where every second counts and space is often limited, optimizing the treatment area becomes a strategic issue for improving the efficiency of healthcare teams and patient safety.*

*The EasyClip® concept was designed to address these constraints with an approach that is ergonomic, intuitive, and modular.*

## Optimize the treatment area

**The accessories** can be **attached** in a single step, **without any tools**, providing immediate time saving.
The **accessories** are fully **modular** and adapt to every need and every care situation, for **smoother** and **more efficient work** on a daily basis.

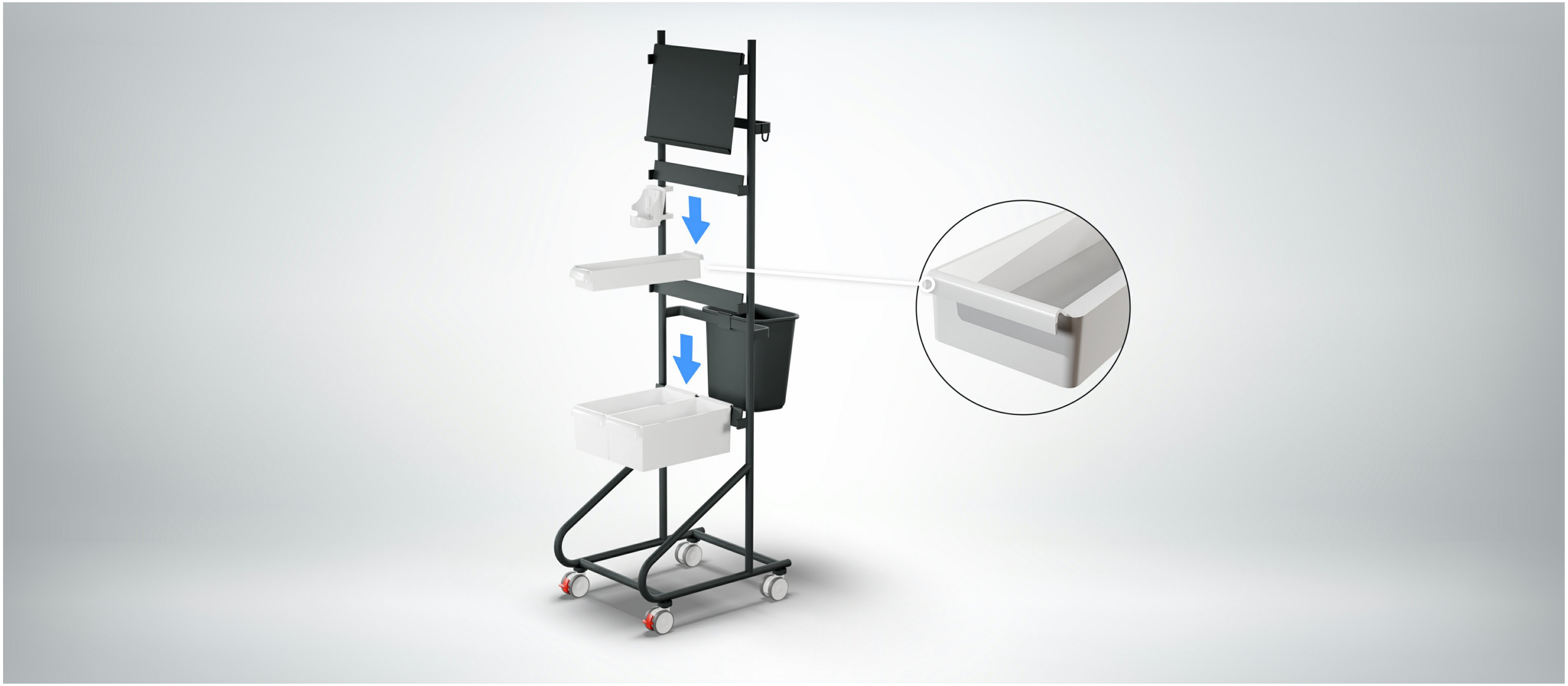



# HIGHLIGHTS

HIGHLIGHTS

# Optimize space (Configurable)



HACARE medical furniture adapts to every use thanks to a **wide range** of **modular components**. It optimizes and secures care and offers **ample** storage **capacity**. **Compatible** with **drawers**, **standard lip trays, and shelves,** it allows for clear and efficient organization. Ideal for **combining** adjoining drawers and standard shelves, it provides a **practical**, scalable, and efficient **workspace** for everyday use, meeting the needs of healthcare teams.

HIGHLIGHTS

# Choosing components for custom medical furniture (Configurable)

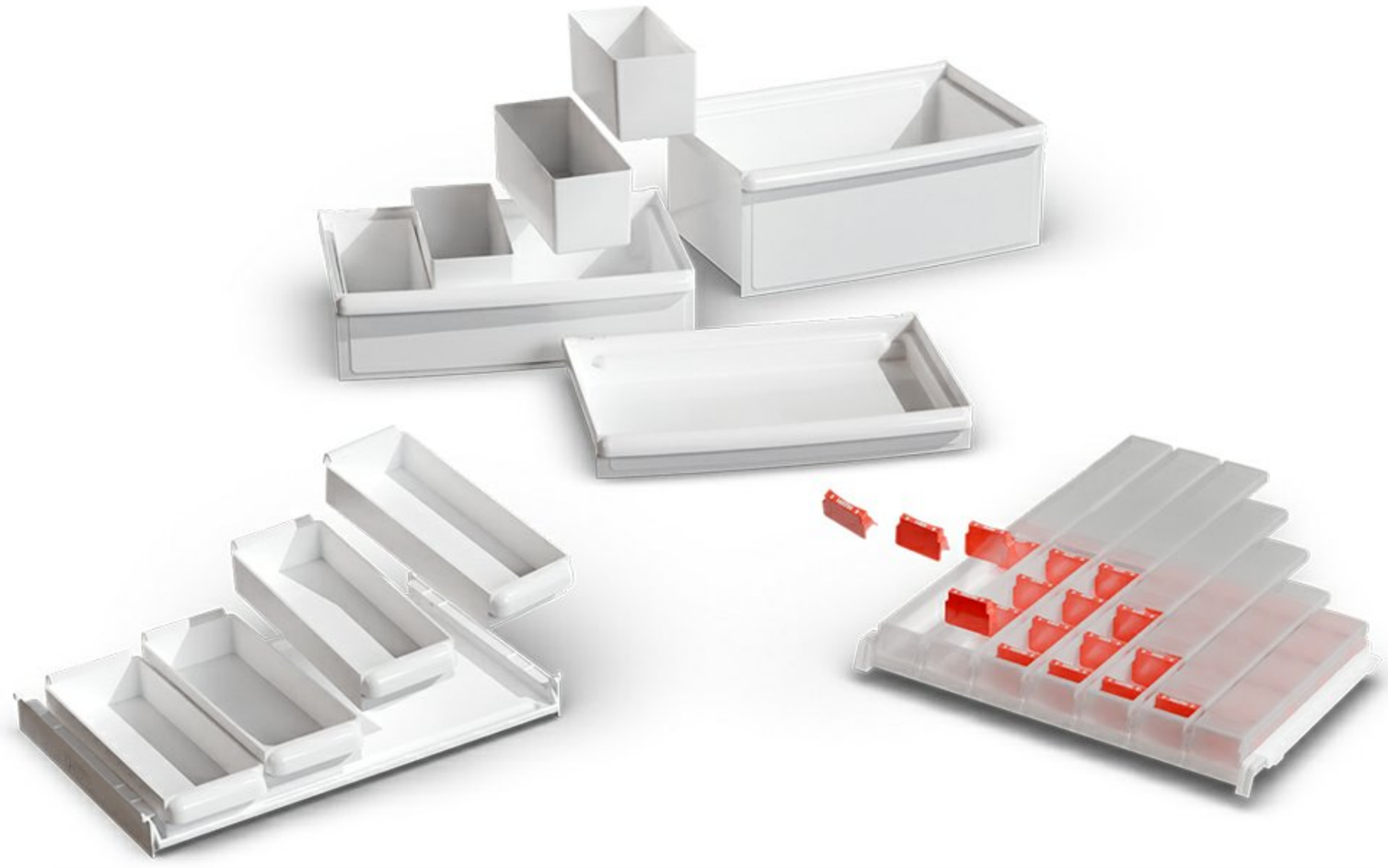

**Configure** your medical furniture according to your **needs** with a wide range of **modular components**. Create a **tailor-made solution that** is perfectly suited to your everyday use. Each element is designed to **optimize** your organization, your working **comfort**, and the **efficiency** of care, while ensuring optimal ergonomics. Complete customization for **furniture** that **is scalable, durable**, and perfectly suited to the requirements of your department.



# CHARACTERISTICS

CHARACTERISTICS

# Dedicated configurations



## The 4-rail mobile trolley

This modular trolley easily **adapts** to all **environments** and needs. Its volcanic black epoxy-coated steel **tubular frame** combines robustness and elegance, while facilitating **disinfection.** Highly **maneuverable** and **secure**, it is equipped with **four** thermoplastic **swivel casters**, **two** of which **have brakes**, for controlled mobility and stable positioning in any situation.



## The high isolation trolley

**Lightweight**, **modular**, and **scalable**, it adapts to all organizations, offering **multiple configurations** to suit your needs. The **side rails** allow for the integration of numerous **accessories** and **components**, optimizing space and efficiency on a daily basis. Thanks to the **EasyClean®** system, the furniture can be quickly disinfected between each patient, ensuring **hygiene**, **safety**, and **fluidity** in care procedures, while facilitating the work of healthcare teams.

# COMPOSANTS : Bac à lèvres

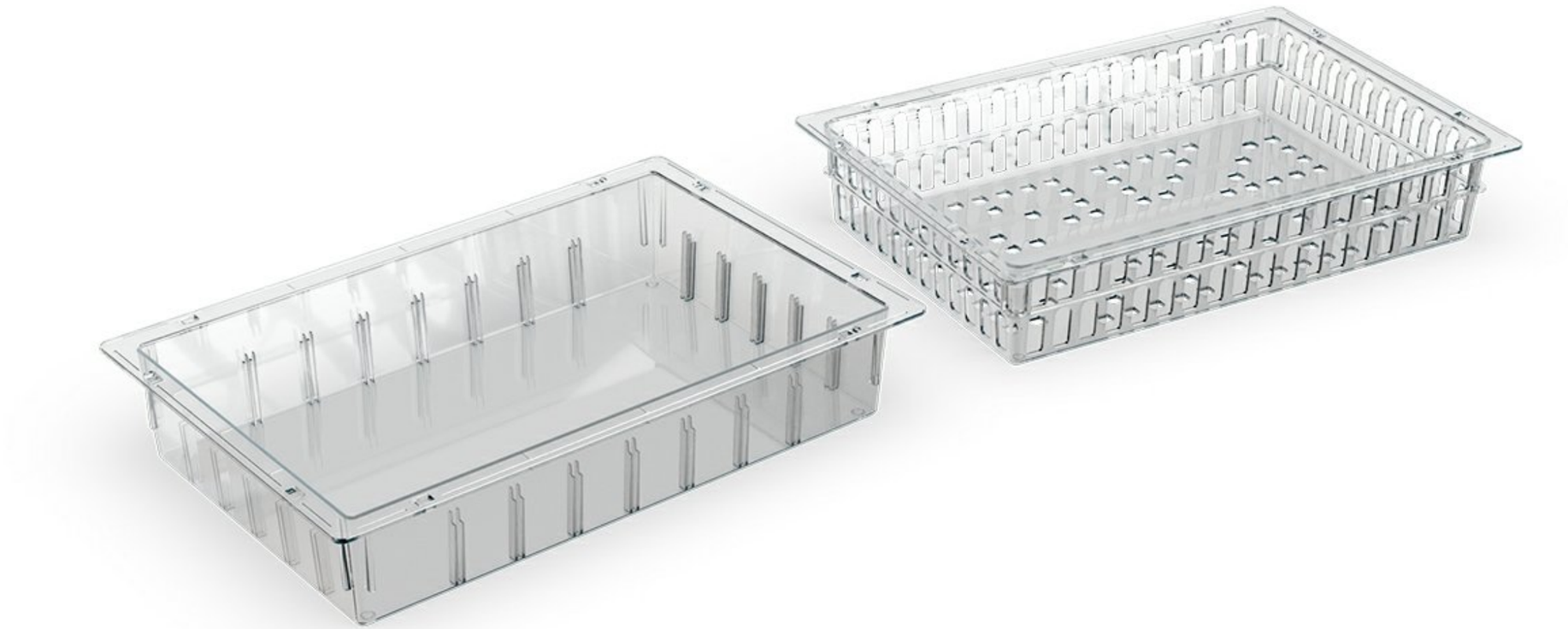

The tray, a universal and standardized storage solution, features a **rear groove** for **hanging**, creating an **isolated area** that limits liquid contamination. **Transparent** for **quick identification** of contents, it can be perforated for added lightness. It adapts to **all structures** and is **easy to clean,** offering a practical, hygienic, and functional solution for organization and safety in healthcare. Available in **three heights** to optimize storage.

CHARACTERISTICS

# COMPOSANTS : Bac à lèvres

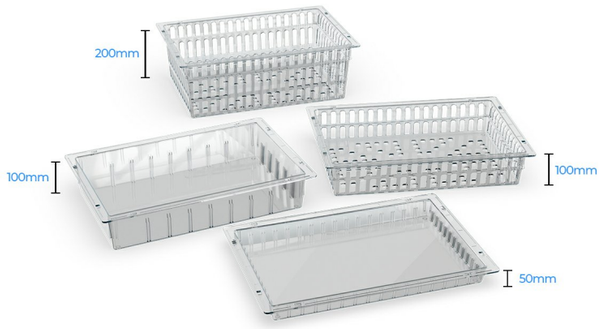


## Choosing your tray

**Solid or openwork**, **transparent** trays offer a secure and hygienic **storage solution** for medical furniture. Their closed design limits the risk of liquid contamination while allowing quick **visualization** of the contents. **Easy to clean**, they ensure durability and practicality for everyday use. Adaptable to **all** structures, they optimize the organization of instruments and consumables, while facilitating the work of healthcare teams. Lightweight and sturdy, they combine safety, ergonomics, and efficiency. Available in **three heights** to optimize storage.

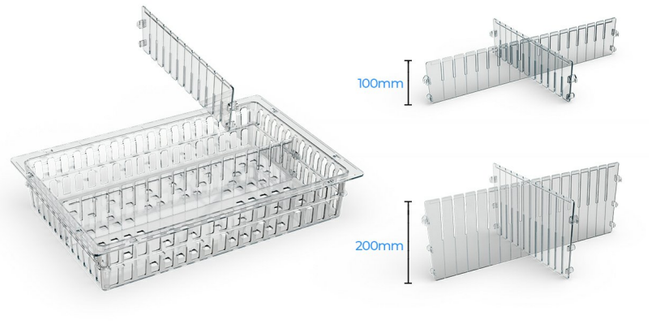


## Combs for Tray

Freely **customize** the **interior layout** of the tray according to your needs with the **divider combs** that separate each skincare product for greater safety.

A **flexible** and scalable **design** that optimizes space.

**Several models** are available to help you create your own organization system.



## Label holders and labels

Label holders on medical furniture drawers facilitate **quick** and accurate **identification** of contents, **reducing errors** and optimizing **healthcare organization**. They enable **clear identification** of medications, medical devices, or supplies, thereby improving team **productivity** and **workflow**. Adaptable and **modular**, they contribute to a structured and **secure** care environment, while **simplifying** the **daily management** of equipment and enhancing the efficiency and safety of interventions.

# COMPOSANTS: Étagères



The modular **shelf** provides practical and accessible **storage space** for medical equipment. Designed to **optimize** the **organization** of instruments and consumables, it facilitates the daily work of healthcare teams. Robust and stable, it supports a variety of equipment while remaining **easy to clean**, ensuring hygiene and durability. **Adaptable** to different configurations, it allows for efficient **structuring** of the care space, providing **quick access** to essential equipment and contributing to a smooth, safe, and ergonomic working environment.

CHARACTERISTICS

# COMPOSANTS: Étagères

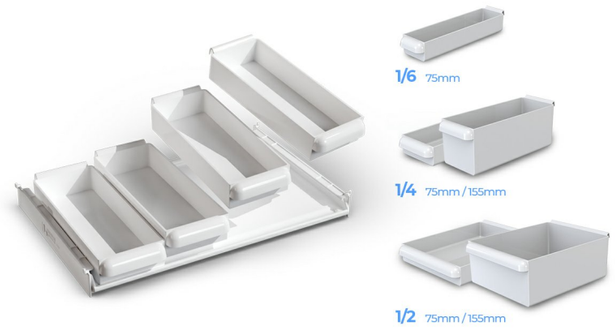


## Separation bins

The medical furniture adapts to **any** healthcare **organization** thanks to its **customizable configurations.** Choose from three drawer heights and freely arrange the **interior layout** according to your needs with the **divider trays.**

A **flexible** and **scalable** design that **optimizes space,** improves ergonomics, and makes each care station more functional on a daily basis.

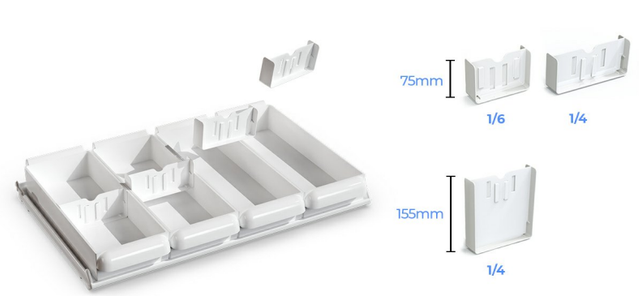


## Separators

Freely **customize** the **interior layout** to suit your needs with dividers, **separators**, and subdivision boxes that isolate each care item for **greater safety**. A **flexible** and **scalable design** that **optimizes space**, improves ergonomics, and makes each care station more functional on a daily basis.

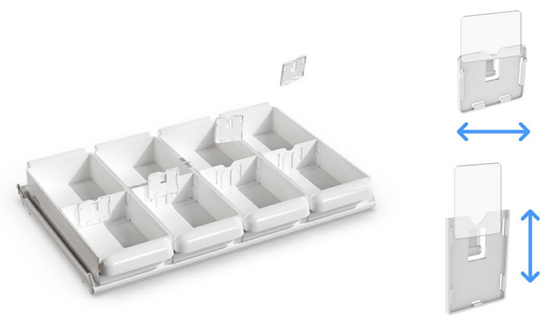

## Label holders and labels

Label holders on medical furniture drawers facilitate **quick** and accurate **identification** of contents, **reducing errors** and optimizing **healthcare organization**. They enable **clear identification** of medications, medical devices, or supplies, thereby improving team **productivity** and **workflow**. Adaptable and **modular**, they contribute to a structured and **secure** care environment, while **simplifying** the **daily management** of equipment and enhancing the efficiency and safety of interventions.

# Technical specifications

## PP-M270814HV2

**HIGH MOBILE RAIL FOR QUARANTINE**

### WEIGHT - ECO-PERFORMANCE

| | |
|---|---|
| Weight bare structure | 14,5 kg |
| Total Weight - Pack | 22 kg |

### DIMENSIONS

| | |
|---|---|
| Width | 47 cm |
| Depth | 60 cm |
| Height | 176 cm |

### TYPE

| | |
|---|---|
| Type of brake | Individual brake |

### MATERIAL & COATING

| | |
|---|---|
| Frame | Welded steel - Volcanic Black Epoxy |
| Wheels | Thermoplastic rubber, grey non-marking |

### BASE

| | |
|---|---|
| Type of footing | 4 swivel wheels with 2 braked at the front |
| Wheels diameter | 75 mm |

### CONFIGURATION

| | |
|---|---|
| Configuration | 4 rails |

### COLORS

| | |
|---|---|
| Box | Volcanic Black |

### FIRE CLASSIFICATION

| | |
|---|---|
| Plastic | M2 |

### COMPOSITION

1 panel - Overall hook flange accessory - Hydro-alcoholic solution holder - Waste bin 13L - 1 drawer divider bin 075 1/2 - 2 drawers dividers bin 155 1/2



## OUR EXCLUSIVES

EASY CLEAN®

EASY CLIP®

## HIGHLIGHTS

- Configurable
- Configurable

# Technical specifications

## PP-M2708214HV1

**MOBILE RAIL FOR QUARANTINE**

### WEIGHT - ECO-PERFORMANCE

| | |
|---|---|
| Weight bare structure | 14,5 kg |
| Total Weight - Pack | 20 kg |

### DIMENSIONS

| | |
|---|---|
| Width | 47 cm |
| Depth | 60 cm |
| Height | 176 cm |

### TYPE

| | |
|---|---|
| Type of brake | Individual brake |

### MATERIAL & COATING

| | |
|---|---|
| Frame | Welded steel - Volcanic Black Epoxy |
| Wheels | Thermoplastic rubber, grey non-marking |

### BASE

| | |
|---|---|
| Type of footing | 4 swivel wheels with 2 braked at the front |
| Wheels diameter | 75 mm |

### CONFIGURATION

| | |
|---|---|
| Configuration | 4 rails |

### COLORS

| | |
|---|---|
| Box | Volcanic Black |

### FIRE CLASSIFICATION

| | |
|---|---|
| Plastic | M2 |

### COMPOSITION

1 support for shelf - 1 shelf - 1 panel - Overall hook flange accessory



## OUR EXCLUSIVES

EASY CLEAN®

EASY CLIP®

## HIGHLIGHTS

- Configurable
- Configurable

# Technical specifications

## MO-M270814H

TOP MOBILE RAIL- 4 RAILS - VOLCANIC BLACK

### WEIGHT - ECO-PERFORMANCE

| | |
|---|---|
| Weight bare structure | 14,5 kg |

### DIMENSIONS

| | |
|---|---|
| Width | 47 cm |
| Depth | 60 cm |
| Height | 176 cm |

### TYPE

| | |
|---|---|
| Type of brake | Individual brake |

### MATERIAL & COATING

| | |
|---|---|
| Frame | Welded steel - Volcanic Black Epoxy |
| Wheels | Thermoplastic rubber, grey non-marking |

### BASE

| | |
|---|---|
| Type of footing | 4 swivel wheels with 2 braked at the front |
| Wheels diameter | 75 mm |

### CONFIGURATION

| | |
|---|---|
| Configuration | 4 rails |

### COLORS

| | |
|---|---|
| Box | Volcanic Black |



## OUR EXCLUSIVES

EASY CLEAN®

EASY CLIP®

## HIGHLIGHTS

- Configurable
- Configurable

# Preventive maintenance tailored to your needs

The maintenance of medical devices is not only a **technical obligation**, but also a **legal** and regulatory responsibility of the organisation.

It is based on:

- A clear policy
- Traceability procedures
- The use of compliant parts
- And staff training

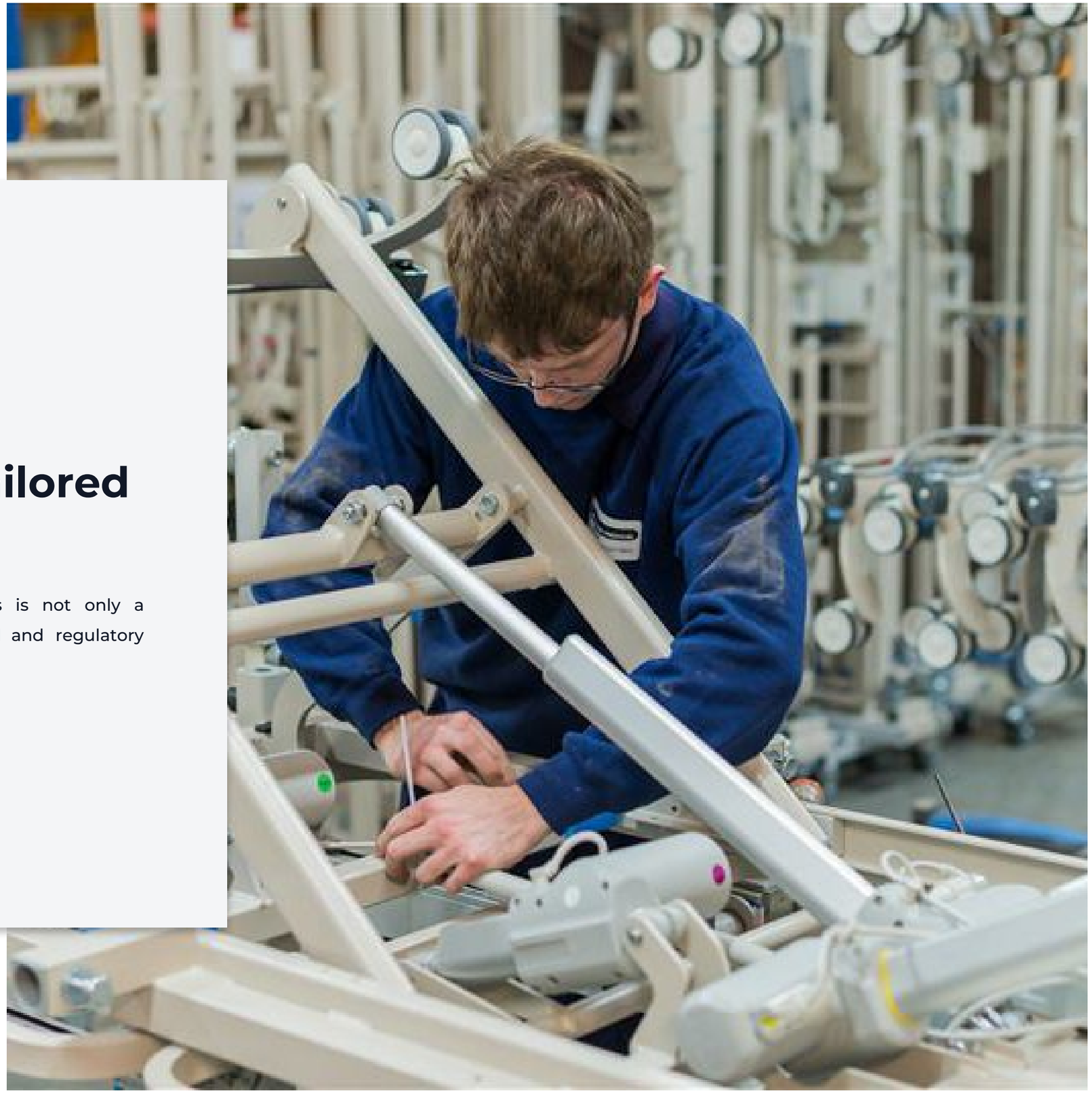

# The advantages of preventive maintenance



## THE BENEFITS OF REGULAR MAINTENANCE OF YOUR EQUIPMENT

- Improved performance: maximum fleet availability.
- Improved quality: a reliable and continuous service.
- Lower costs: reduced repair costs.
- Fewer breakdowns: continuity guaranteed.



## EXTEND THE LIFESPAN OF YOUR EQUIPMENT & ENSURE SAFETY

Our maintenance programmes are designed to:
- Ensure your equipment performs to its full potential.
- Provide regular checks and reliable diagnostics.
- Safeguard the safety of patients, residents and carers.
- Maintain your organisation’s regulatory compliance.



## A BUDGET UNDER CONTROL

Our maintenance solutions help you to:
- Plan your expenditure.
- Avoid unexpected costs.
- Optimise your investments with complete transparency.



## CERTIFIED COMPONENTS FOR SUSTAINABLE VIABILITY

All our services are carried out using original parts that have been tested and approved, guaranteeing:
- Maximum safety when using your equipment.
- Strict compliance with regulatory standards.
- The durability and reliability of your beds, mattresses and accessories.

# Our preventive maintenance services



## A SINGLE POINT OF CONTACT FOR A COMPREHENSIVE SOLUTION

From pre-sales to after-sales, we support you every step of the way.

Through a **detailed analysis** of your needs, we provide **tailored technical support**, based on a **long-term** and **effective** partnership.

## EXPERTS AT YOUR SIDE

Our technicians and engineers, who receive regular training in the latest innovations, guarantee you:
- A responsive, high-quality service.
- Professional installation of your equipment.
- Comprehensive training for your teams, delivered directly on-site.

## OUR TECHNICIANS CARRY OUT A FULL INSPECTION

- Mechanical inspection: assembly, joints, brakes, locking mechanisms.
- Electrical inspection: components, controls, sensors.
- Safety features: barriers, locking systems, protective devices.
- Lubrication: re-greasing of all pivot points.
- Electrical tests: carried out in accordance with current standards.

Each operation (inspection, adjustment, replacement) is recorded in the technician’s maintenance report.

## RENOVATION OF THE PARK

Following the visit, our preventive maintenance team will email you the **maintenance report** completed for each piece of equipment.
The **service reports** are sent to your HAcare contact, who will draw up the necessary quotes for repairs or replacements.

This provides you with **comprehensive** and **transparent** tracking of the **maintenance** of your equipment fleet.

The result: a clear and traceable process that guarantees the safety, compliance and availability of your equipment. Translated with DeepL.com (free version)

# ALLIBERT MÉDICAL

**ZAC de Fourquevaux, 100 avenue du Formans**
**01600 - TRÉVOUX, FRANCE**

Tél +33 (0)4 74 08 71 71
export@hacare.com

**Sales in the French Overseas Departments and Communities (DROM-COM)**
f.milloux@hacare.com
06 25 83 86 00

**International Export Department**
export@hacare.com
+33 (0)4 74 08 71 71

**Sales assistant**
export@hacare.com
+33 (0)4 74 08 71 71

HAcare

MEDICAL

1860

MKT-26-PO-HOP-SES-BOP-CDI-MMRMH-EN
2026