HOSPITAL



GYPSUM CARTS SECURE TROLLEY WITH JOINT DRAWERS - MM3 (MOD'ALLI)

SOFT SOUND® EASY CLEAN® EASY CLIP® EASY MOV'®

Care and service equipment - Care

greenly 2024 Or Climate Strategy Rating TOP 5%

MKT-26-PO-HOP-SES-SOI-CHP-M3MCP-EN 21/11/2026

Summary

HAcare, specialist in medical devices since 1860. 3

HAcare Group's eco-responsible commitments 4

Choose the circular economy 5

Recyclable materials 6

Certifications 7

Gypsum carts Hospital Care 8

Our exclusives

- Soft Sound 10
- Easy CLEAN 11
- Easy Clip 12
- EasyMov and the motorized fifth wheel 13

Highlights

- Protect and lock (Joined drawers) 15
- Secure tray for reliable preparation (Work surface) 16
- Extendable shelf (Optimizing space) 17
- Optimal organization (Configurable) 18
- Accessory rail (Easy Clip) 19

Characteristics

- Mobility 21
- Safety 22
- Configurable ..... 23 - 24
- Computerization of organizational structures 25

Preventive maintenance tailored to your needs 28

The advantages of preventive maintenance 29

Our preventive maintenance services 30



HAcare, specialist in medical devices since 1860.

At HAcare, we design, manufacture and distribute medical devices and innovative, durable medical furniture solutions designed to improve the daily lives of patients and healthcare professionals alike.

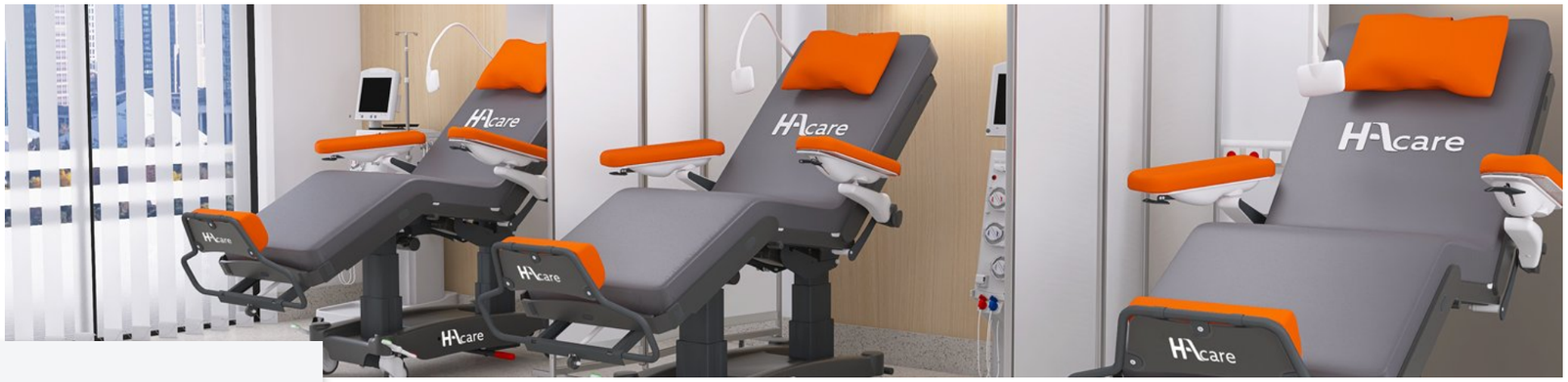









The HAcare Group's eco-responsible commitments

The HAcare group commits to an **eco-responsible industrial orientation**

In its sustainable development strategy, the HAcare group has defined a list of **6 commitments** that guide its **actions and decisions** since the group's creation and for the years to come.

Indicators have been set up for each commitment.

Our 6 commitments

- Made in France production
- The use of renewable resources
- Integrating the circular economy into all new product developments
- Responsible purchasing (supplier quality monitoring)
- Daily actions to respect and protect the environment
- Combating RSI and noise pollution through our products

Choose the circular economy



HAcare finished products can be recycled through a recovery circuit at the end customer's premises, for recycling with our partner supplier. As wood cannot be recycled ad infinitum because its fibers become too small or exhausted, wood waste is recovered and transformed into green energy.



The plant fiber boards used in the manufacture of HAcare products are 100% reclaimed wood. Each HAcare finished product bears an index revealing the proportion of plant fiber contained.



Recycling is the practice of recovering used materials from the waste stream, then incorporating these same materials into the manufacturing process. Each HAcare finished product carries an index revealing the proportion of recycled material it contains.



Recyclable materials

HAcare finished products are 95% recyclable. For example, the HAcare medical bed is entirely recyclable, except for the wheels and motors. Each bed can be dismantled to recover each material separately: plant fiber, metal, plastic.

PLANT FIBER



Recycled wood

The plant fiber boards used in the manufacture of HAcare Group products are:

100% reused wood

Reuse is one of the environmentally friendly processes. It involves, for example, leftovers from wood-processing companies (e.g. sawmill scraps, production offcuts...). But also by-products from activities such as sustainable forest management and slope maintenance.

100% FSC-certified wood

Recyclable with a partner supplier who, on a worldwide exclusive basis and since 2021, recycles MDF and HDF panels.No water consumption, nor green energy **biomass**.

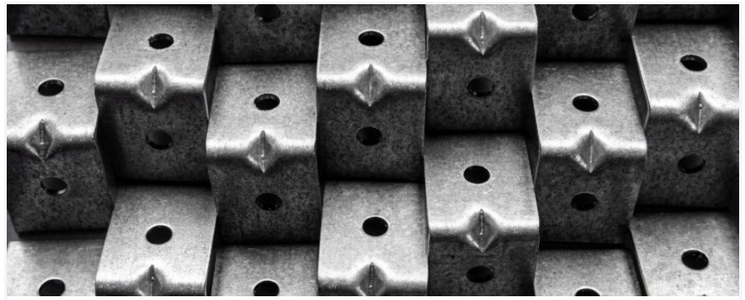

The metal

All metal components are **recyclable** and reusable, **infinitely**. Once the metal has been sorted, it is compressed, crushed, rolled and melted. It is then remolded into coils, bars or wire for reuse. This process can be endless!

Metal recycling has **many advantages**. It conserves natural resources by reducing the need for virgin materials, cuts energy consumption and reduces **greenhouse gas emissions**.



Recycled plastic

At recycling plants, waste (re) becomes a **raw material** through various processes: grinding, micronization, regeneration of plastics.

The recycled plastic will then be resold to **plasturgy** manufacturers in the form of **flakes**, powder or even **granules**.

Certifications



MANAGEMENT AND CUSTOMER SATISFACTION
ISO 9001

MEDICAL DEVICE
ISO 13485

GOLD | Top 5%
ecovadis
Sustainability Rating
MAY 2026

greenly
2024
Or
Climate Strategy Rating
TOP 5%

GYPSUM CARTS HOSPITAL

Care

Secure trolley with joint drawers - MM3 (MOD'ALLI)





OUR EXCLUSIVES

OUR EXCLUSIVES

Soft Sound

Over the past 40 years, the average noise level in hospitals has increased by 15 decibels (dB), reaching levels of around 70 dB, well above the WHO recommended limit of 35 dB for a healthcare environment. HAcare products are designed to combat noise pollution. The goal is to reduce noise by 20 dB by adding shock absorbers to all rolling and stretcher-mounted structures.

SOFT SOUND®

Combating noise pollution

Anti-vibration support, high-performance **shock absorber**: for smooth, **quiet**, and comfortable **movement**, even when crossing thresholds or exiting elevators.
Noise pollution is significantly **reduced**.

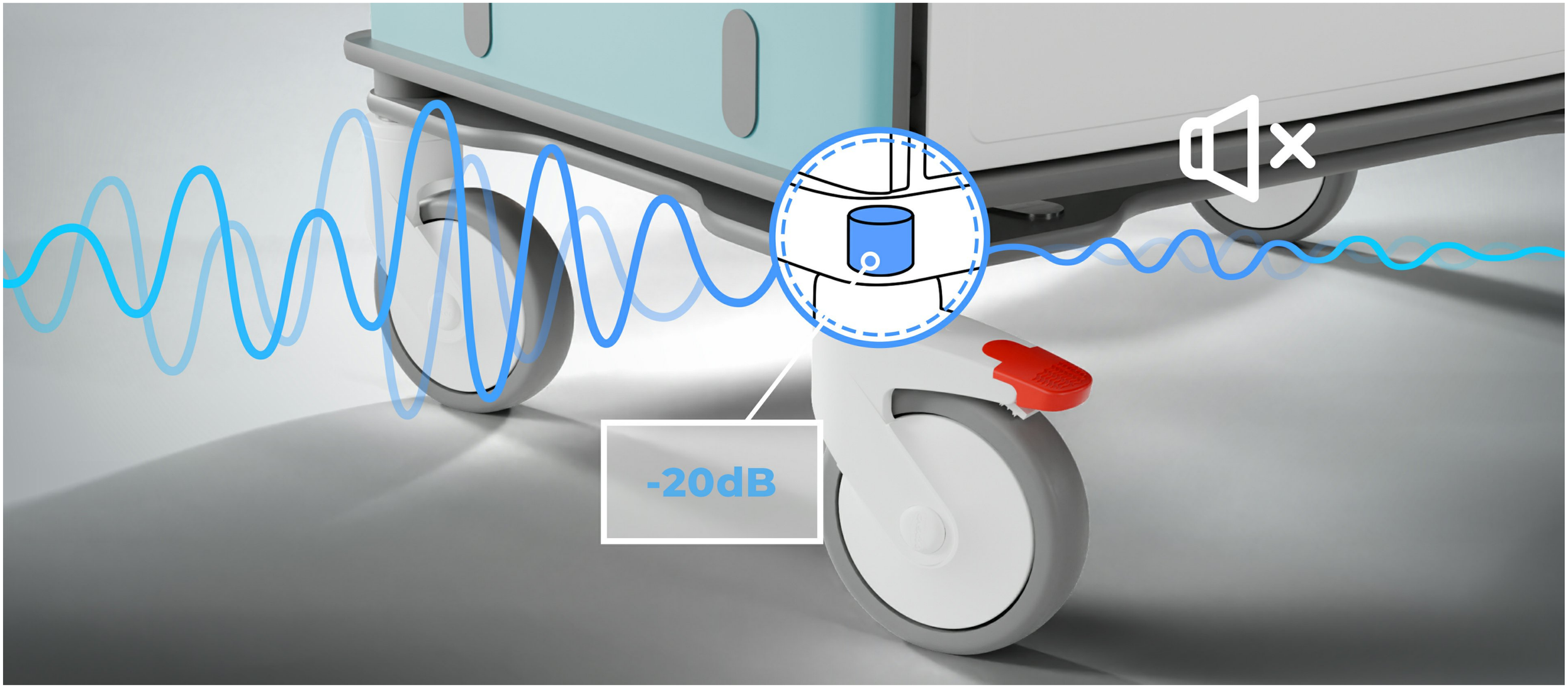

OUR EXCLUSIVES

Easy CLEAN

In a hospital setting where hygiene is an absolute imperative, every minute spent cleaning counts. Healthcare staff are faced with the need to ensure rigorous disinfection while maintaining a sustained pace of work. The EasyClean® solution addresses this challenge by making cleaning easier. Hygiene protocols are followed without compromise, while reducing the workload for staff. The result: less effort, less time wasted, and enhanced safety for both patients and caregivers.

EasyClean® guarantees a cleaner, safer, and more ergonomic environment,

Make cleaning easier

Tool-free disassembly for quick and thorough cleaning, prevents any retention for **perfect hygiene** and real **time saving** for nursing staff.



OUR EXCLUSIVES

Easy Clip

In a healthcare environment where every second counts and space is often limited, optimizing the treatment area becomes a strategic issue for improving the efficiency of healthcare teams and patient safety.

The EasyClip® concept was designed to address these constraints with an approach that is ergonomic, intuitive, and modular.

Optimize the treatment area

The accessories can be **attached** in a single step, **without any tools**, providing immediate time saving.
The **accessories** are fully **modular** and adapt to every need and every care situation, for **smoother** and **more efficient work** on a daily basis.

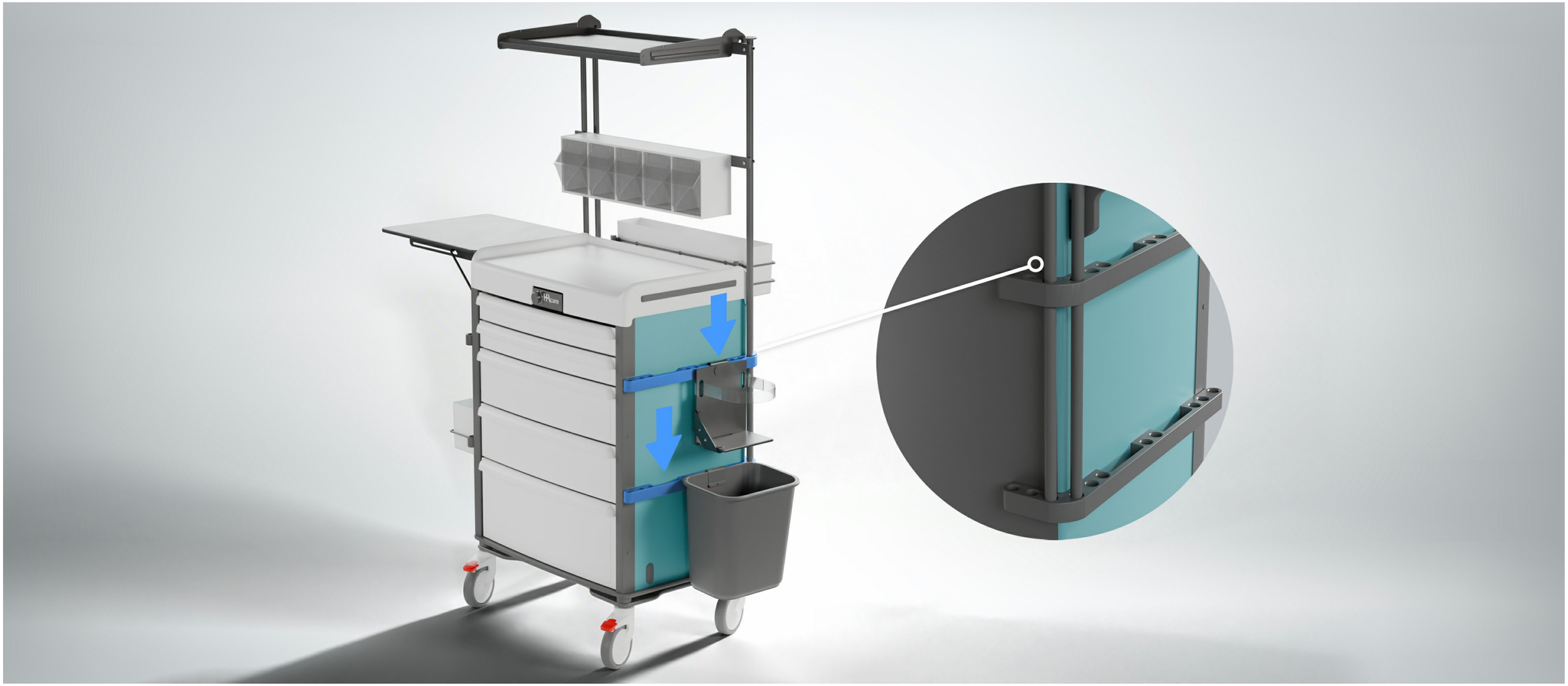

OUR EXCLUSIVES

EasyMov and the motorized fifth wheel

In a hospital environment under constant strain, handling heavy loads and moving stretchers pose daily challenges for medical teams. Between overcrowded wards and narrow hallways, the risks of musculoskeletal disorders (MSDs) for staff and discomfort for patients are heightened. It was to address these challenges related to workplace health and the quality of patient care that the assisted transport solution was developed.

Motorization with the 5th wheel

The **motorization**, combined with a **5th swivel wheel,** offers excellent **maneuverability**.
It **makes** getting **around easier** with its **removable**, **lockable battery**, a **20 km range**, and a **forward/reverse trigger** equipped with an **electric brake.**

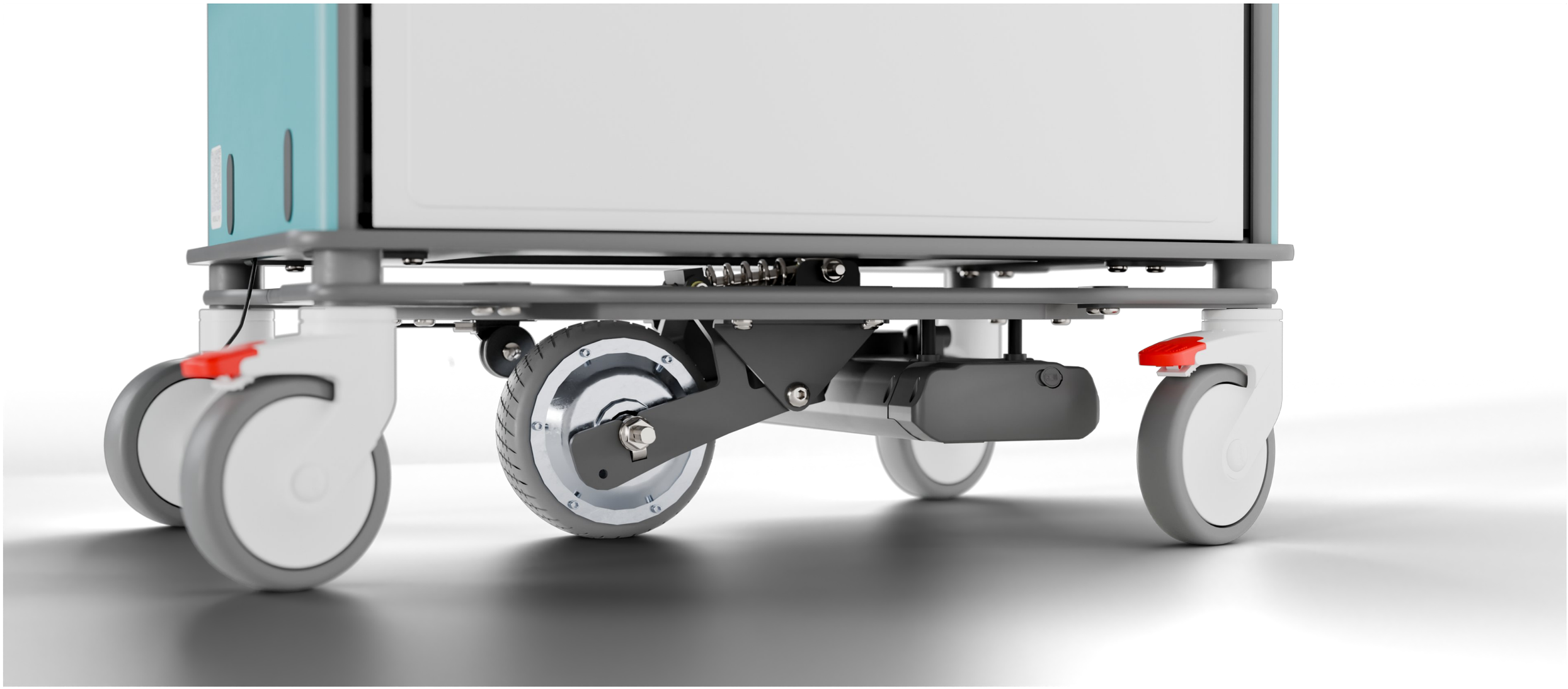



HIGHLIGHTS

Protect and lock (Joined drawers)

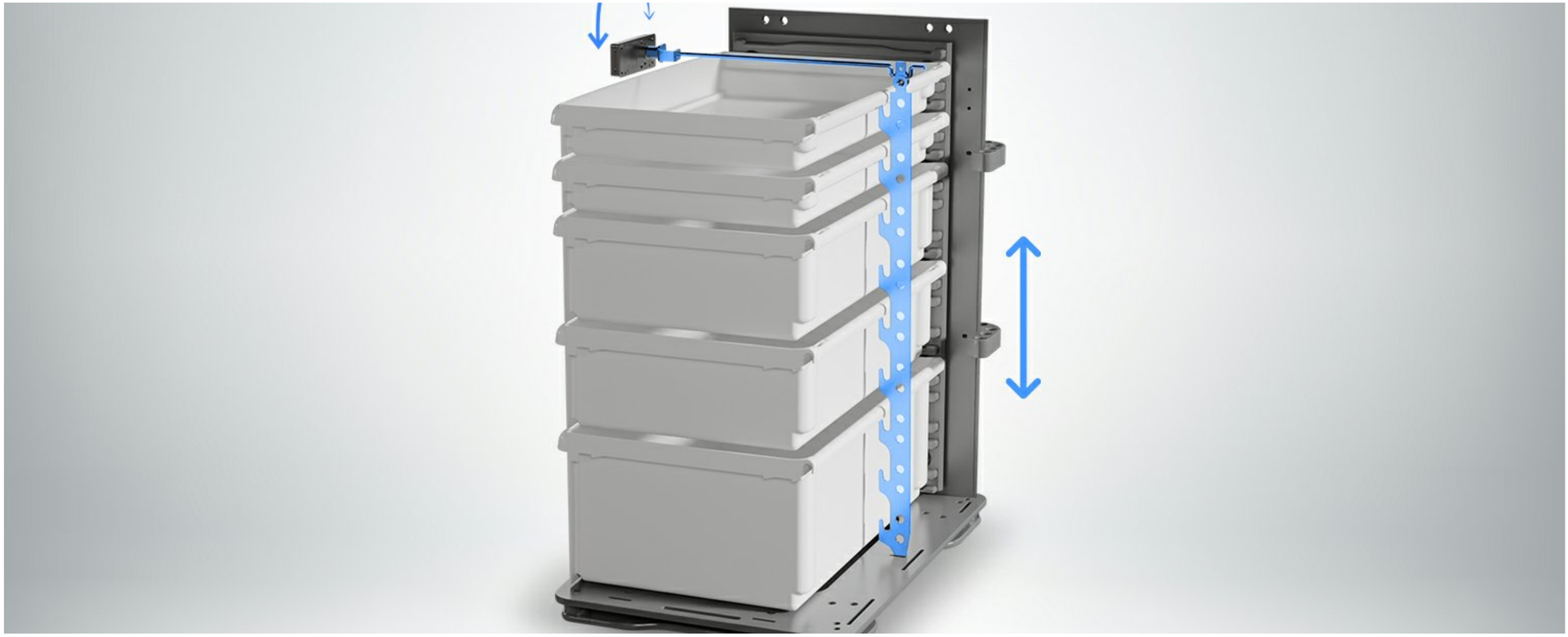

The **adjoining drawers protect** the contents of the drawers from prying **eyes**, **light**, and **UV** rays, thus preserving the **quality** and **confidentiality** of the stored products.

Thanks to the **centralized locking** system, opening and closing can be done **in a single step**, simplifying the work of staff while enhancing **security**.

A practical and reliable solution that combines protection, efficiency, and peace of mind on a daily basis.

HIGHLIGHTS

Secure tray for reliable preparation (Work surface)

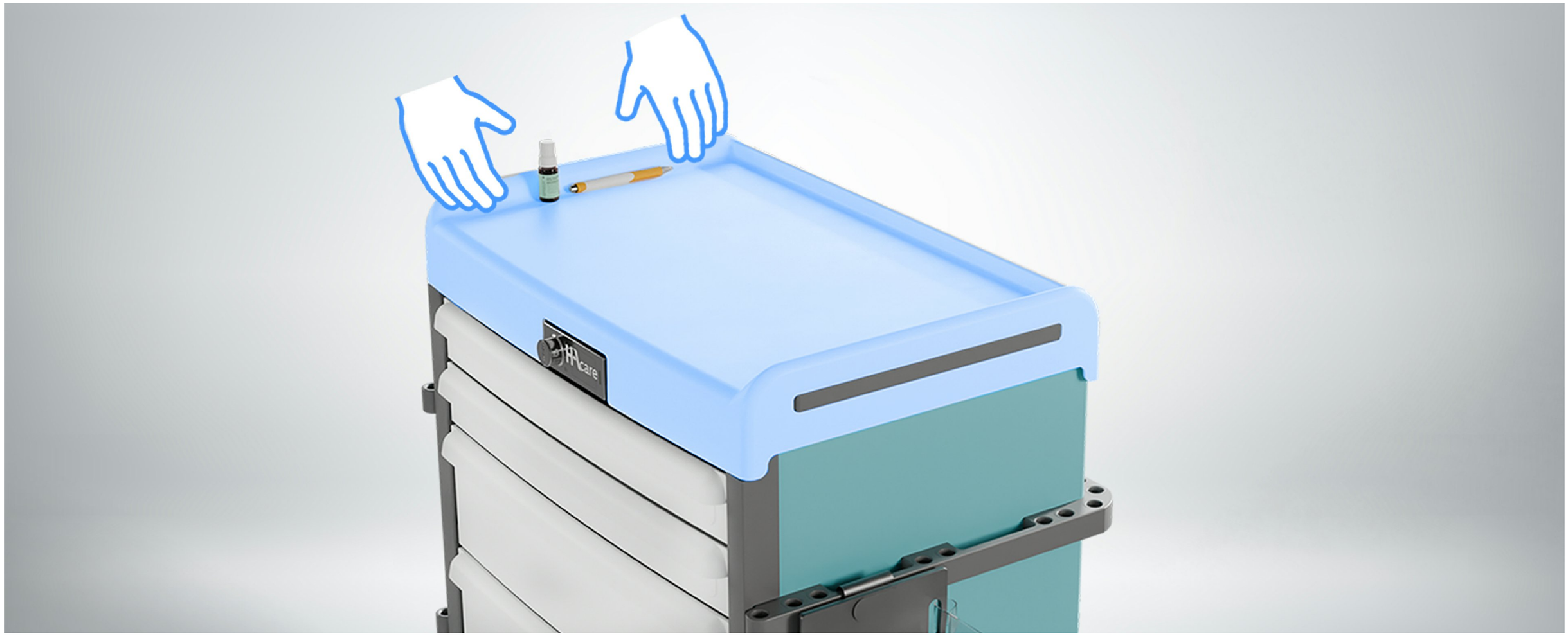

The medical furniture **tray** is designed with a **rim on three sides** to ensure **optimal safety** during treatment preparation. This design **prevents instruments** or **products from falling**, even when moving. Practical and ergonomic, it allows healthcare staff to work with confidence, with a **stable**, secure, and **easy-to-maintain workspace**. A design that combines safety, ease of use, and everyday efficiency.

Extendable shelf (Optimizing space)



The **sliding shelf** provides a practical **extension** of the **work surface**, ideal for optimizing space during treatment. Combined with peripheral Accessories, it **secures bottles** and **equipment** while keeping the main tray clear. The first drawer, dedicated to the keyboard and mouse, frees up even more preparation space. An STPO slot completes the set for ergonomic, fluid organization that is perfectly suited to demanding medical environments.

Optimal organization (Configurable)



HACARE medical furniture adapts to every use thanks to its **modular components**. With the **P80 concept**, it optimizes care and maximizes storage. Compatible with standard drawers and trays, it guarantees **clear organization** (compatible with X3 or X6 boxes). Its **side trays** allow **plaster casts** to be **soaked**, while the **dispenser** makes them easy to use. Practical, scalable, and ergonomic, this furniture ensures a **fluid**, efficient **workspace** that is perfectly suited to the needs of caregivers.

Accessory rail (Easy Clip)

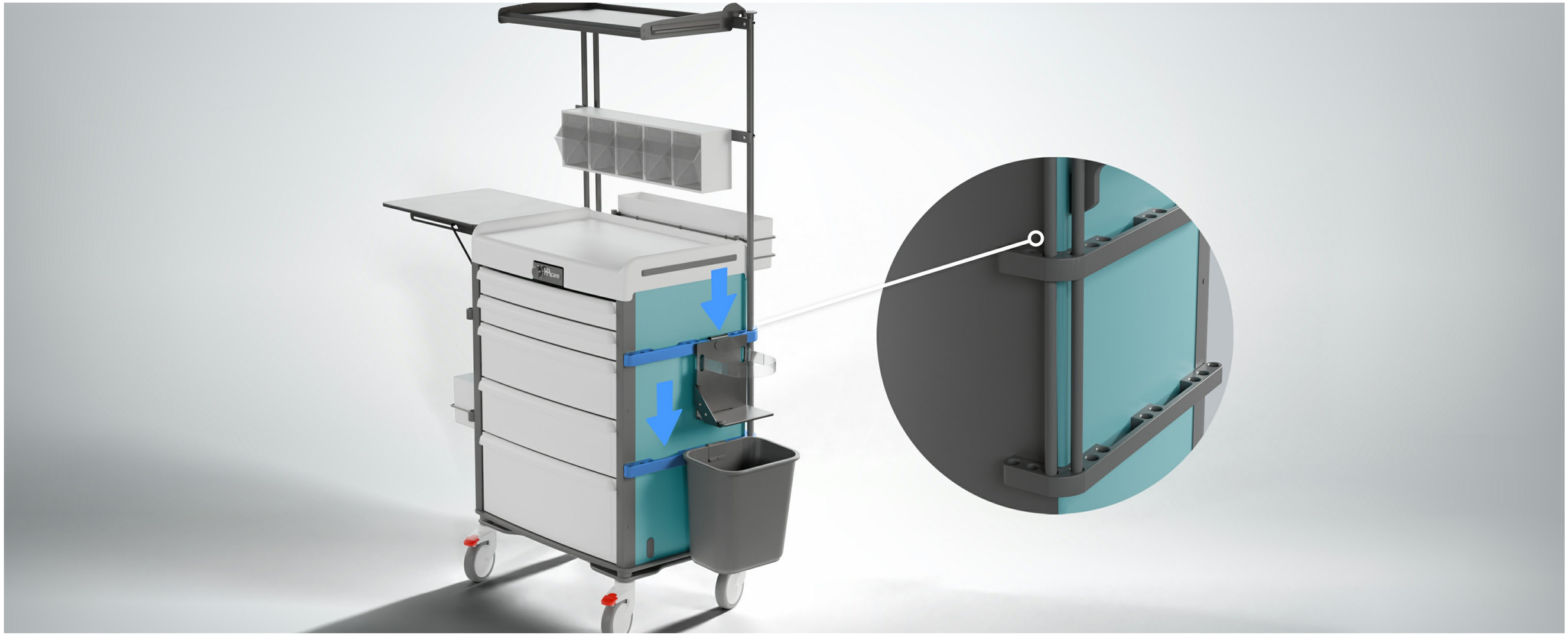

EASY CLIP

Choose your accessories based on the uses and needs of your department. Our **Easy Clip** concept allows for **easy installation** and **reorganization** on rails, **without any tools.** This allows you to gain efficiency and flexibility.



CHARACTERISTICS

CHARACTERISTICS

Mobility



Choice of casters

The medical furniture adapts to any environment thanks to **a choice of** 75 mm or 125 mm **casters**, allowing for **optimal** adjustment of the work **surface height** and **ease of movement**.

The **two front brakes**, easily accessible by foot, ensure **perfect stability** during care or preparation, reinforcing the **safety** of the furniture and the confidence of caregivers in their actions.

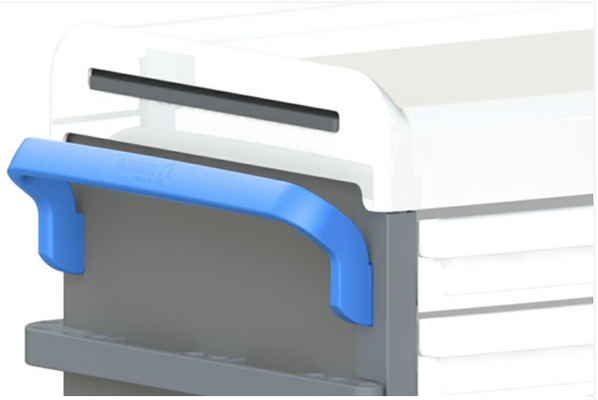

Push handles

Designed to combine ease of use and performance, our medical furniture offers **optimal maneuverability** and a **good grip** thanks to its **push handle**.

Its integrated shock absorber system makes it easy to move around.

Every **movement** is **smooth**, reducing fatigue and protecting the health of users on a daily basis.

Designed to **limit musculoskeletal disorders** (MSDs), it allows caregivers to work in better ergonomic conditions, while ensuring the safety and stability of the equipment being transported.



EasyMOV

Designed to combine ease of use with performance, our medical furniture offers **optimal maneuverability** thanks to its **built-in shock-absorption** system. This technology **absorbs vibrations** and uneven floor surfaces, ensuring smooth, **safe**, and **effortless movement**—even in demanding hospital environments.

The push handle makes it easy **to maneuver**.

Every movement is made easier, reducing fatigue and protecting users' health on a daily basis.

Designed to **minimize musculoskeletal disorders** (MSDs), it allows caregivers to work under better ergonomic conditions while ensuring the safety and stability of the equipment being transported.

Safety



Digital code lock

The **digital code lock** offers **optimal security** and **simplified access management** for medical equipment. Unlike keys, the code guarantees reliable and quick locking, limiting the risk of loss or duplication.

It allows **precise control of access** to medications and medical devices, while improving **traceability** and **confidentiality**. Ideal for demanding hospital environments, it combines practicality, security, and compliance with healthcare protocols.



RFID locking

RFID locking ensures optimal security and **controlled access** to medical equipment. Using a **badge** or **personal card**, each opening is simple, quick, and **traceable**. It enhances **confidentiality**, limits unauthorized access, and is perfectly suited to demanding hospital environments, where fluidity and reliability are essential. A modern, secure, and ergonomic system for **simplified management** and **optimal control** of medical equipment.



Key lock

Key locks on medical furniture ensure reliable and accessible **security** for storing sensitive medications and equipment. **Easy to use**, they restrict unauthorized access while offering a **robust** and **proven solution**. Ideal for demanding hospital environments, they protect **contents**, enhance **confidentiality**, and contribute to compliance with **security protocols**. A practical and effective solution for securing equipment on a daily basis and facilitating the work of healthcare teams.

CHARACTERISTICS

Configurable



Optimize space

HACARE medical furniture adapts to every use thanks to a **wide range** of **modular components**. The P80 version optimizes care and offers **ample** storage **capacity**. **Compatible** with **standard drawers** and **trays**, it allows for clear and efficient organization. Ideal for **combining** adjoining drawers and standard shelves, it provides a **practical**, scalable, and efficient **workspace** for everyday use, meeting the needs of healthcare teams.



Modularity according to use

The medical furniture offers **great modularity** for optimized storage: **small drawers** for small medical supplies (syringes, needles, etc.), **medium drawers** for compresses and infusion sets, and a **large drawer** for large-volume solutions. The **sliding shelf,** which is mainly used for administrative tasks, increases the work surface area and frees up space for preparation. A dedicated space for **IT equipment** optimizes and facilitates patient monitoring.

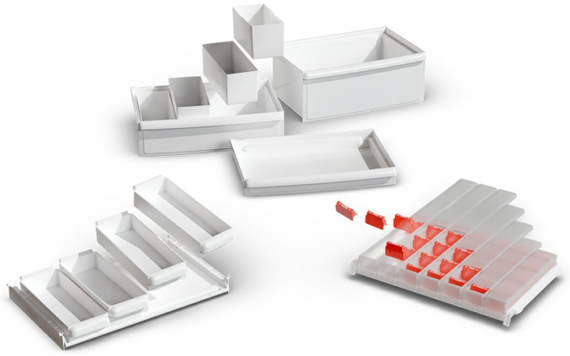

Choosing components for custom medical furniture

Configure your medical furniture according to your **needs** with a wide range of **modular components**. Create a **tailor-made solution that** is perfectly suited to your everyday use. Each element is designed to **optimize** your organization, your working **comfort**, and the **efficiency** of care, while ensuring optimal ergonomics. Complete customization for **furniture** that **is scalable, durable**, and perfectly suited to the requirements of your department.

CHARACTERISTICS

Configurable



Selecting "type" configurations

Thanks to **our expertise** in medical furniture, we design **"type" configurations** for every use. Careful selection of **components** and **Accessories**, optimized layout, ergonomics, and ease of use: everything is designed to meet the specific needs of each department. **Our team will help you** define the configuration best suited to your practices, combining functionality, durability, and everyday efficiency.

Choosing colors for medical furniture

Customize your hospital environment by choosing from a wide **range of colors**. Ideal for **differentiating spaces by department** or use and **facilitating orientation** for healthcare staff and patients.

CHARACTERISTICS

Computerization of organizational structures



Comfort and reliability for connected patient monitoring

The **computer arm** with **lockable** metal plate is designed to provide smooth, stable, and **secure** use during **patient monitoring**. **Robust** and ergonomic, it keeps equipment in **the ideal position** while **protecting it** from unauthorized tampering. Its **lockable plate** ensures **reliable** attachment and **safe** use in demanding healthcare environments.



CTSPO box

The HACARE **secure computer box** transforms into **a sliding tablet** with an integrated keyboard and mouse, ideal for **holding a laptop**. It provides quick and secure access to the digital tools essential for monitoring care. Designed to **integrate patient monitoring** devices into the daily routine of healthcare teams, it combines security, ergonomics, and practicality, offering an optimized, fluid, and organized **workspace** for more **efficient** care and **simplified** management of medical information.



Computer gateway

The HACARE computer **arm with gantry**, combined with a **sliding drawer** equipped with a keyboard and mouse, offers a complete solution for monitoring care. Complemented by a **CTSPO slot**, this system allows for the ergonomic integration of **IT tools** directly into the workstation. It guarantees **fast** and **secure access** to **patient data**, optimizes space, and streamlines the daily tasks of healthcare teams, combining comfort, organization, and efficiency in all care environments.





The medical furniture **adapts** to any healthcare organization thanks to its **customizable configurations**. Choose from three drawer heights and **freely configure** the interior layout to suit your needs.

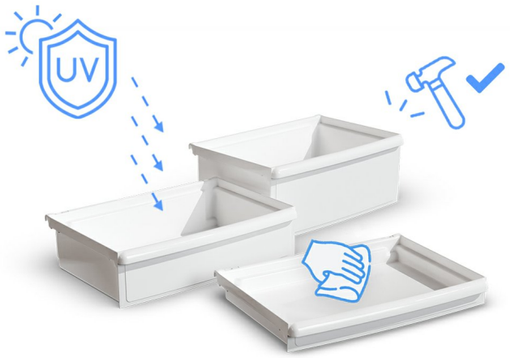

Adjoining drawers

T h e **adjoining drawers protect** the contents of the drawers **from** prying **eyes**, **light**, and **UV** rays, thus preserving the quality and **confidentiality** of the stored products.

Thanks to the **centralized locking** system, opening and closing can be done i n **a single step**, simplifying the work of staff while enhancing security.
The **removable drawers** can be **cleaned in an autoclave**, and the **rounded corners** make cleaning easier.

A practical and reliable solution that combines protection, efficiency, and peace of mind on a daily basis.

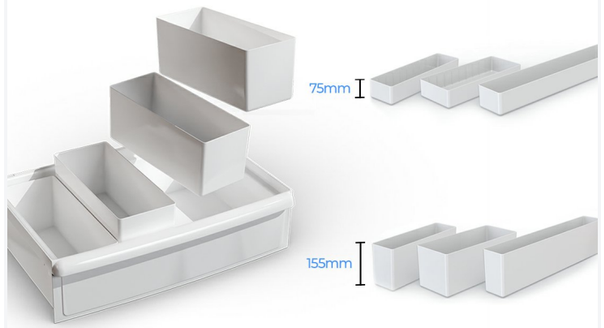

Separation bins

The medical furniture adapts to **any** healthcare **organization** thanks to its **customizable configurations.** Choose from three drawer heights and freely arrange the **interior layout** according to your needs with the **divider trays.**

A **flexible** and **scalable** design that **optimizes space,** improves ergonomics, and makes each care station more functional on a daily basis.

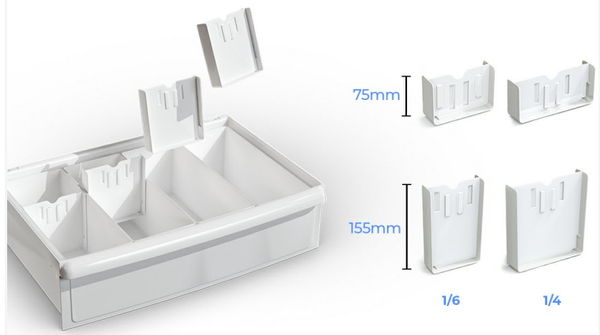

Separators

Freely **customize** the **interior layout** to suit your needs with dividers, **separators**, and subdivision boxes that isolate each care item for **greater safety**. A **flexible** a n d **scalable design** that **optimizes space**, improves ergonomics, and makes each care station more functional on a daily basis.

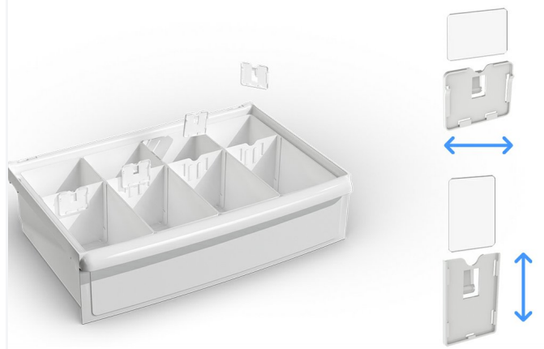

Label holders and labels

Label holders on medical furniture drawers facilitate **quick** and accurate **identification** of contents, **reducing errors** and optimizing **healthcare organization**. They enable **clear identification** of medications, medical devices, or supplies, thereby improving t e a m **productivity** and **workflow**. Adaptable and **modular**, they contribute to a structured and **secure** care environment, while **simplifying** the **daily management** of equipment and enhancing the efficiency and safety of interventions.

Preventive maintenance tailored to your needs

The maintenance of medical devices is not only a **technical obligation**, but also a **legal** and regulatory responsibility of the organisation.

It is based on:

- A clear policy
- Traceability procedures
- The use of compliant parts
- And staff training

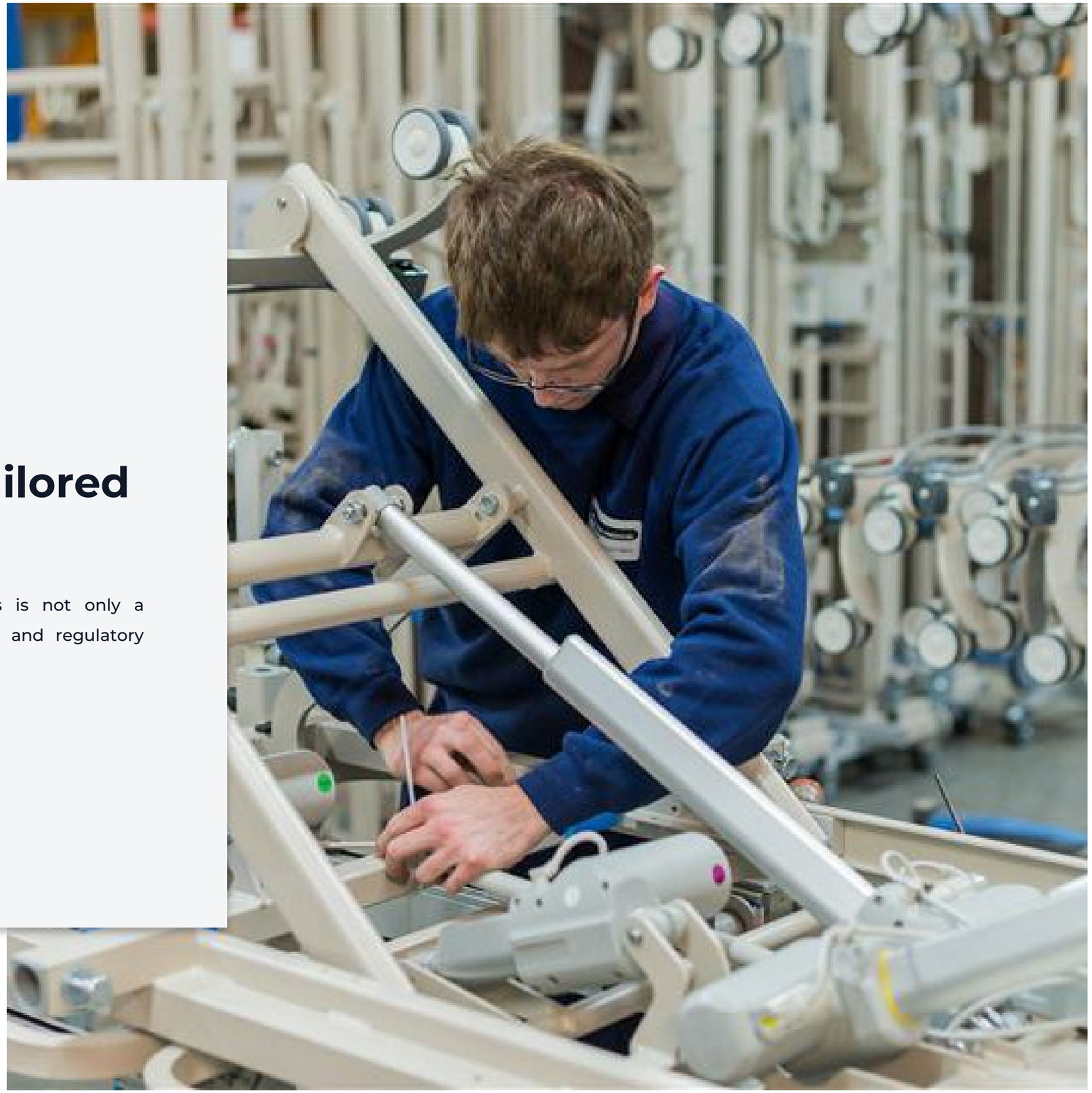

The advantages of preventive maintenance

THE BENEFITS OF REGULAR MAINTENANCE OF YOUR EQUIPMENT

- Improved performance: maximum fleet availability.
- Improved quality: a reliable and continuous service.
- Lower costs: reduced repair costs.
- Fewer breakdowns: continuity guaranteed.

EXTEND THE LIFESPAN OF YOUR EQUIPMENT & ENSURE SAFETY

Our maintenance programmes are designed to:
- Ensure your equipment performs to its full potential.
- Provide regular checks and reliable diagnostics.
- Safeguard the safety of patients, residents and carers.
- Maintain your organisation’s regulatory compliance.

A BUDGET UNDER CONTROL

Our maintenance solutions help you to:
- Plan your expenditure.
- Avoid unexpected costs.
- Optimise your investments with complete transparency.

CERTIFIED COMPONENTS FOR SUSTAINABLE VIABILITY

All our services are carried out using original parts that have been tested and approved, guaranteeing:
- Maximum safety when using your equipment.
- Strict compliance with regulatory standards.
- The durability and reliability of your beds, mattresses and accessories.

Our preventive maintenance services



A SINGLE POINT OF CONTACT FOR A COMPREHENSIVE SOLUTION

From pre-sales to after-sales, we support you every step of the way.

Through a **detailed analysis** of your needs, we provide **tailored technical support**, based on a **long-term** and **effective** partnership.

EXPERTS AT YOUR SIDE

Our technicians and engineers, who receive regular training in the latest innovations, guarantee you:
- A responsive, high-quality service.
- Professional installation of your equipment.
- Comprehensive training for your teams, delivered directly on-site.

OUR TECHNICIANS CARRY OUT A FULL INSPECTION

- Mechanical inspection: assembly, joints, brakes, locking mechanisms.
- Electrical inspection: components, controls, sensors.
- Safety features: barriers, locking systems, protective devices.
- Lubrication: re-greasing of all pivot points.
- Electrical tests: carried out in accordance with current standards.

Each operation (inspection, adjustment, replacement) is recorded in the technician’s maintenance report.

RENOVATION OF THE PARK

Following the visit, our preventive maintenance team will email you the **maintenance report** completed for each piece of equipment.
The **service reports** are sent to your HAcare contact, who will draw up the necessary quotes for repairs or replacements.

This provides you with **comprehensive** and **transparent** tracking of the **maintenance** of your equipment fleet.

The result: a clear and traceable process that guarantees the safety, compliance and availability of your equipment. Translated with DeepL.com (free version)

ALLIBERT MÉDICAL

ZAC de Fourquevaux, 100 avenue du Formans
01600 - TRÉVOUX, FRANCE

Tél +33 (0)4 74 08 71 71
export@hacare.com

Sales in the French Overseas Departments and Communities (DROM-COM)
f.milloux@hacare.com
06 25 83 86 00

International Export Department
export@hacare.com
+33 (0)4 74 08 71 71

Sales assistant
export@hacare.com
+33 (0)4 74 08 71 71

HAcare

MEDICAL

1860

MKT-26-PO-HOP-SES-SOI-CHP-M3MCP-EN
2026