HOSPITAL



AMBULATORY CARE CHAIRS AND BEDS SIDE RAILS (TECH) - MATTRESS - AMB7 LSA (CLAVIA)

SOFT SOUND® · EASY MOV'® · TECH+ SIDE RAILS® · EASY CLIP®

Day care unit - Outpatient care

greenly 2024 Or Climate Strategy Rating TOP 5%

MKT-26-PO-HOP-AMB-SA-FSA-AMLSA-EN 21/11/2026

Summary

HAcare, specialist in medical devices since 1860. 3

HAcare Group's eco-responsible commitments 4

Choose the circular economy 5

Recyclable materials 6

Certifications 7

Ambulatory care chairs and beds Hospital Outpatient care 8

Our exclusives

- Soft Sound 10
- Easy MOV 11
- Tech + side guards 12
- Easy Clip 13

Highlights

- Ultra-comfort in a single step (Pre-programmed functions) 15
- Streamline the process, reassure the patient (Optimizing space) 16
- Facilitate maintenance (Interchangeability) 17
- The QR Code for accessing all information (Traceability) 18

Characteristics

- Mobility 20
- Side guards 21
- Controls 22
- Pre-programmed functions 23
- Safety 24
- Lying surface 25

Technical specifications 26

Options & Accessories 28

Preventive maintenance tailored to your needs 31

The advantages of preventive maintenance 32

Our preventive maintenance services 33



HAcare, specialist in medical devices since 1860.

At HAcare, we design, manufacture and distribute medical devices and innovative, durable medical furniture solutions designed to improve the daily lives of patients and healthcare professionals alike.

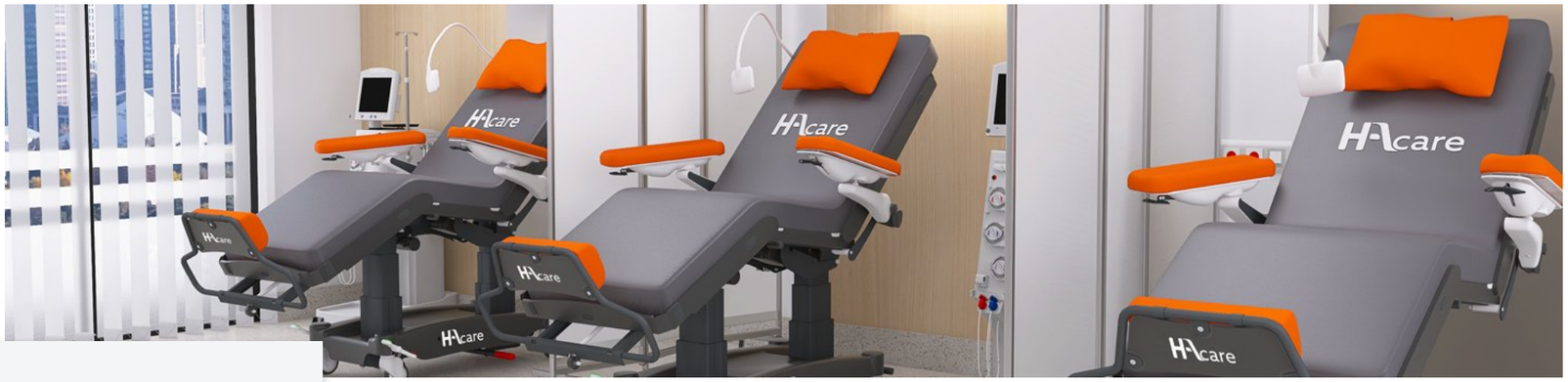









The HAcare Group's eco-responsible commitments

The HAcare group commits to an **eco-responsible industrial orientation**

In its sustainable development strategy, the HAcare group has defined a list of **6 commitments** that guide its **actions and decisions** since the group's creation and for the years to come.

Indicators have been set up for each commitment.

Our 6 commitments

- Made in France production
- The use of renewable resources
- Integrating the circular economy into all new product developments
- Responsible purchasing (supplier quality monitoring)
- Daily actions to respect and protect the environment
- Combating RSI and noise pollution through our products

Choose the circular economy



HAcare finished products can be recycled through a recovery circuit at the end customer's premises, for recycling with our partner supplier. As wood cannot be recycled ad infinitum because its fibers become too small or exhausted, wood waste is recovered and transformed into green energy.



The plant fiber boards used in the manufacture of HAcare products are 100% reclaimed wood. Each HAcare finished product bears an index revealing the proportion of plant fiber contained.



Recycling is the practice of recovering used materials from the waste stream, then incorporating these same materials into the manufacturing process. Each HAcare finished product carries an index revealing the proportion of recycled material it contains.



Recyclable materials

HAcare finished products are 95% recyclable. For example, the HAcare medical bed is entirely recyclable, except for the wheels and motors. Each bed can be dismantled to recover each material separately: plant fiber, metal, plastic.

PLANT FIBER



Recycled wood

The plant fiber boards used in the manufacture of HAcare Group products are:

100% reused wood

Reuse is one of the environmentally friendly processes. It involves, for example, leftovers from wood-processing companies (e.g. sawmill scraps, production offcuts...). But also by-products from activities such as sustainable forest management and slope maintenance.

100% FSC-certified wood

Recyclable with a partner supplier who, on a worldwide exclusive basis and since 2021, recycles MDF and HDF panels.No water consumption, nor green energy **biomass**.

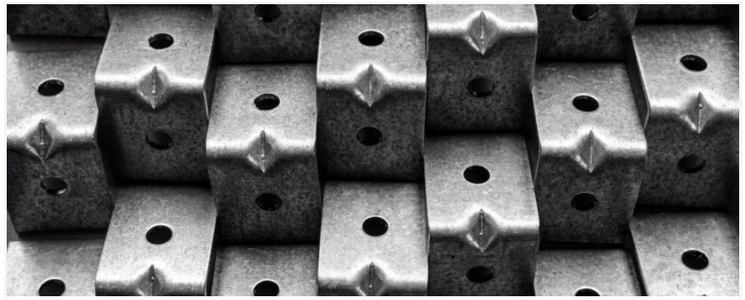

The metal

All metal components are **recyclable** and reusable, **infinitely**. Once the metal has been sorted, it is compressed, crushed, rolled and melted. It is then remolded into coils, bars or wire for reuse. This process can be endless!

Metal recycling has **many advantages**. It conserves natural resources by reducing the need for virgin materials, cuts energy consumption and reduces **greenhouse gas emissions**.



Recycled plastic

At recycling plants, waste (re) becomes a **raw material** through various processes: grinding, micronization, regeneration of plastics.

The recycled plastic will then be resold to **plasturgy** manufacturers in the form of **flakes**, powder or even **granules**.

Certifications



MANAGEMENT AND CUSTOMER SATISFACTION
ISO 9001

MEDICAL DEVICE
ISO 13485

GOLD | Top 5%
ecovadis
Sustainability Rating
MAY 2026

greenly
2024
Or
Climate Strategy Rating
TOP 5%

AMBULATORY CARE CHAIRS AND BEDS HOSPITAL

Outpatient care

Side rails (TECH) - Mattress - AMB7 LSA (CLAVIA)





OUR EXCLUSIVES

OUR EXCLUSIVES

Soft Sound

Over the past 40 years, the average noise level in hospitals has increased by 15 decibels (dB), reaching levels of around 70 dB, well above the WHO recommended limit of 35 dB for a healthcare environment. HAcare products are designed to combat noise pollution.The goal is to reduce noise by 20 dB by adding shock absorbers to all rolling and stretcher-mounted structures.

SOFT SOUND®

Combating noise pollution

Anti-vibration support, **high-performance shock absorber**: for **smooth**, **quiet**, and **comfortable transport**, even when crossing thresholds or exiting elevators.**Noise pollution is significantly reduced.**

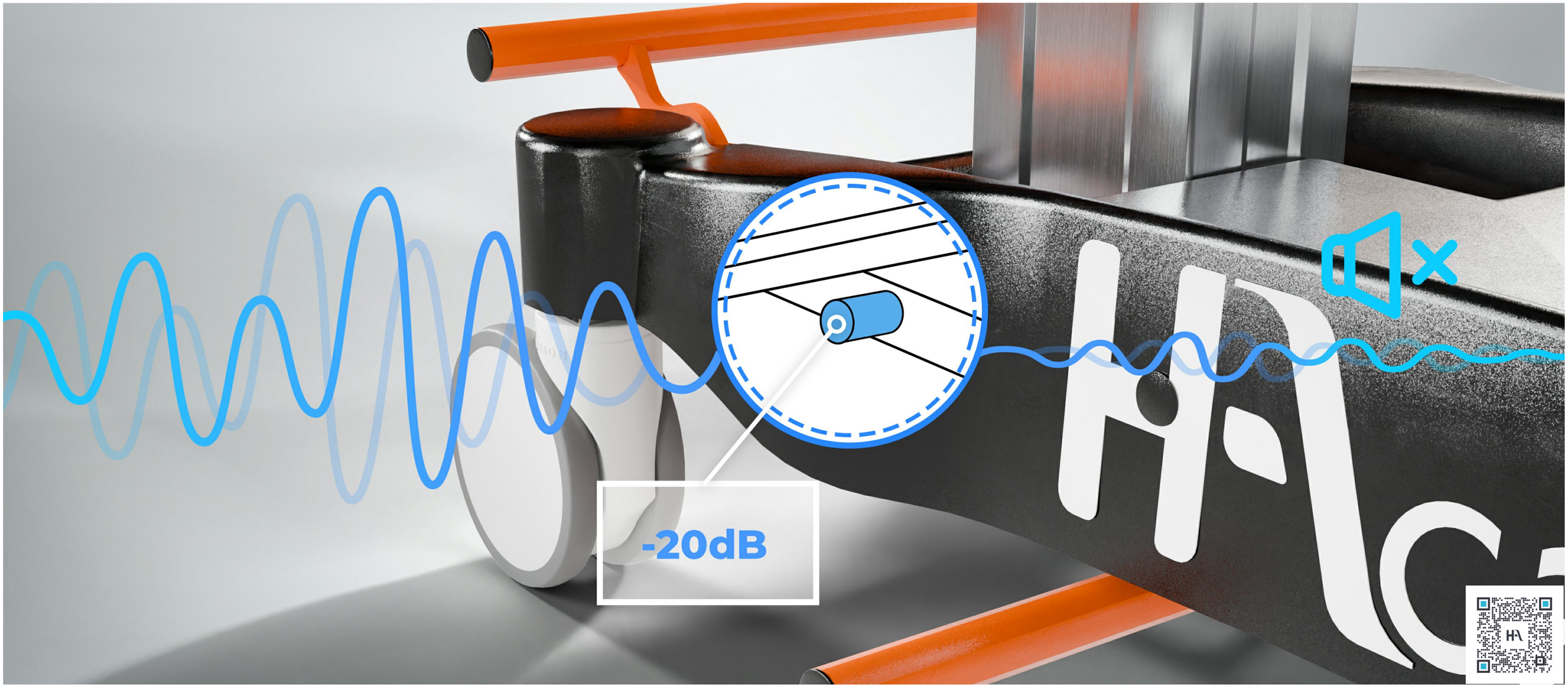

OUR EXCLUSIVES

Easy MOV

In a hospital environment where every action counts, protecting the health of caregivers while ensuring patient safety is essential. Stretcher transport, an activity with a high risk of MSDs due to repeated exertion and awkward postures, requires appropriate solutions. Designed to reduce strain and optimize movement, our medical devices become true everyday allies, improving comfort, ergonomics, and quality of life at work.

Combating musculoskeletal disorders

Its **ergonomic, retractable handles, double wheels**, and **synchronized fifth steering wheel** optimize its maneuverability.
Its **four shock-resistant corner guards** and **integrated shock absorbers** absorb impacts.



OUR EXCLUSIVES

Tech + side guards

In outpatient care, every detail counts: equipment must combine patient autonomy, lasting comfort, and ergonomics for caregivers. Solutions that integrate intuitive controls, quick adjustments, and handling assistance simplify daily tasks, reduce fatigue, and enhance safety. The result: time savings for teams and a smoother, more peaceful care experience for patients.

TECH+ barriers with integrated controls

Autonomy and comfort for **patients**, ergonomics and **responsiveness** for **caregivers**. Easy to access and assisted, they **facilitate every movement**, even during intensive use.



OUR EXCLUSIVES

Easy Clip

In a healthcare environment where every second counts and space is often limited, optimizing the treatment area becomes a strategic issue for improving the efficiency of healthcare teams and patient safety.
The EasyClip® concept was designed to meet these constraints with an approach that is ergonomic, intuitive, and modular.

Optimize the treatment area

Tool-free attachment, immediate time savings. Quick access to the patient, freed-up treatment space, **accessories that can be adapted** to suit every need.





HIGHLIGHTS

Ultra-comfort in a single step (Pre-programmed functions)



With our **intuitive pre-programmed control** system, a single press of the remote control is all it takes to access the **"Ultra-comfort" position**, also known as **"zero gravity."**

This ergonomic position has been designed to distribute body pressure evenly across the entire mattress. The pelvis, legs, and back are positioned in such a way as to promote **muscle relaxation**, **relieve joint tension**, and **stimulate blood circulation**, while reducing areas of compression.

This function plays a key role in improving perceived comfort, **preventing postural pain**, and enhancing the quality of care.

Streamline the process, reassure the patient (Optimizing space)

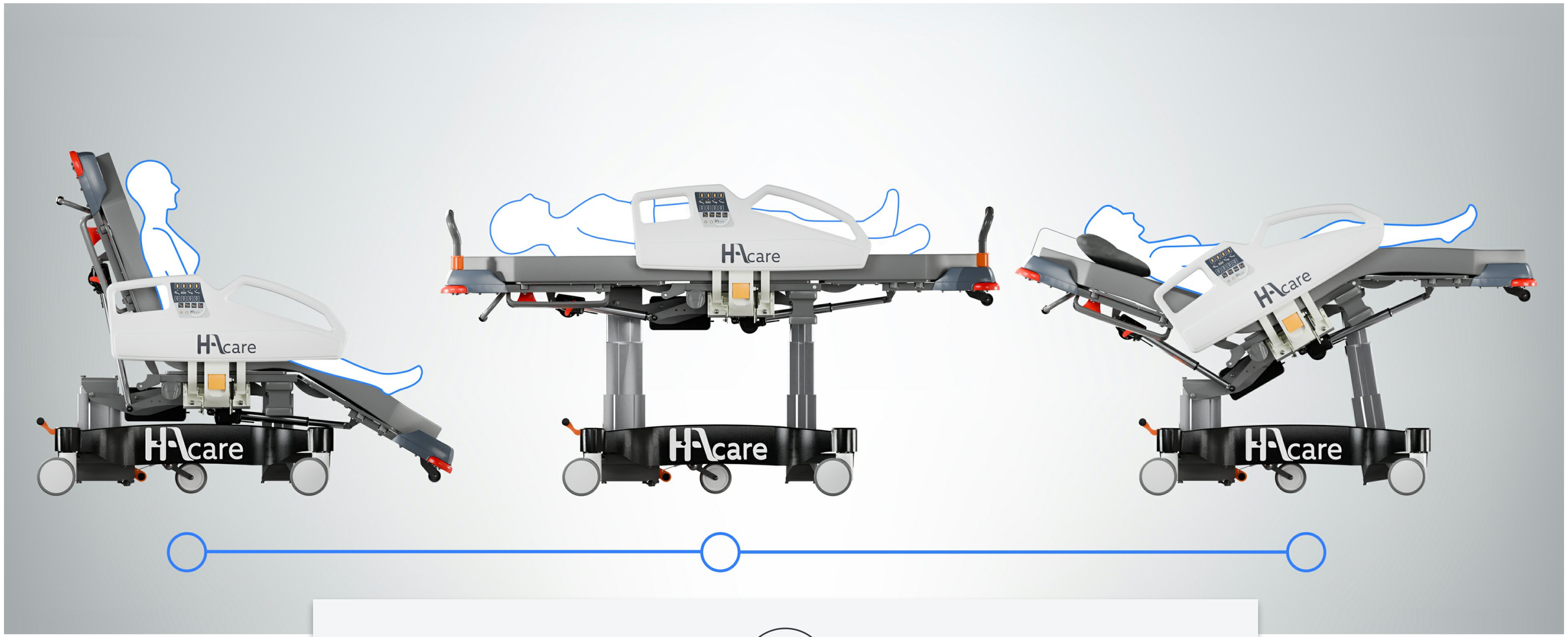

The Ambulatory Care Bed (ACB) **accompanies** the patient **from reception to the operating room** and then to the recovery room, **without** unnecessary **transfers**.
Versatile and compact, it **reduces handling**, optimizes ergonomics, and **keeps the patient comfortably positioned** throughout their journey. This continuity **reduces preoperative anxiety**, reinforces the feeling of safety**,** and promotes **better recovery.**
For teams, the LSA **streamlines the process**, **saves time**, and simplifies logistics.
In rooms, its compact size allows for three LSA beds to be installed in place of two standard beds, **optimizing space** without compromising on comfort or quality of care.

Facilitate maintenance (Interchangeability)

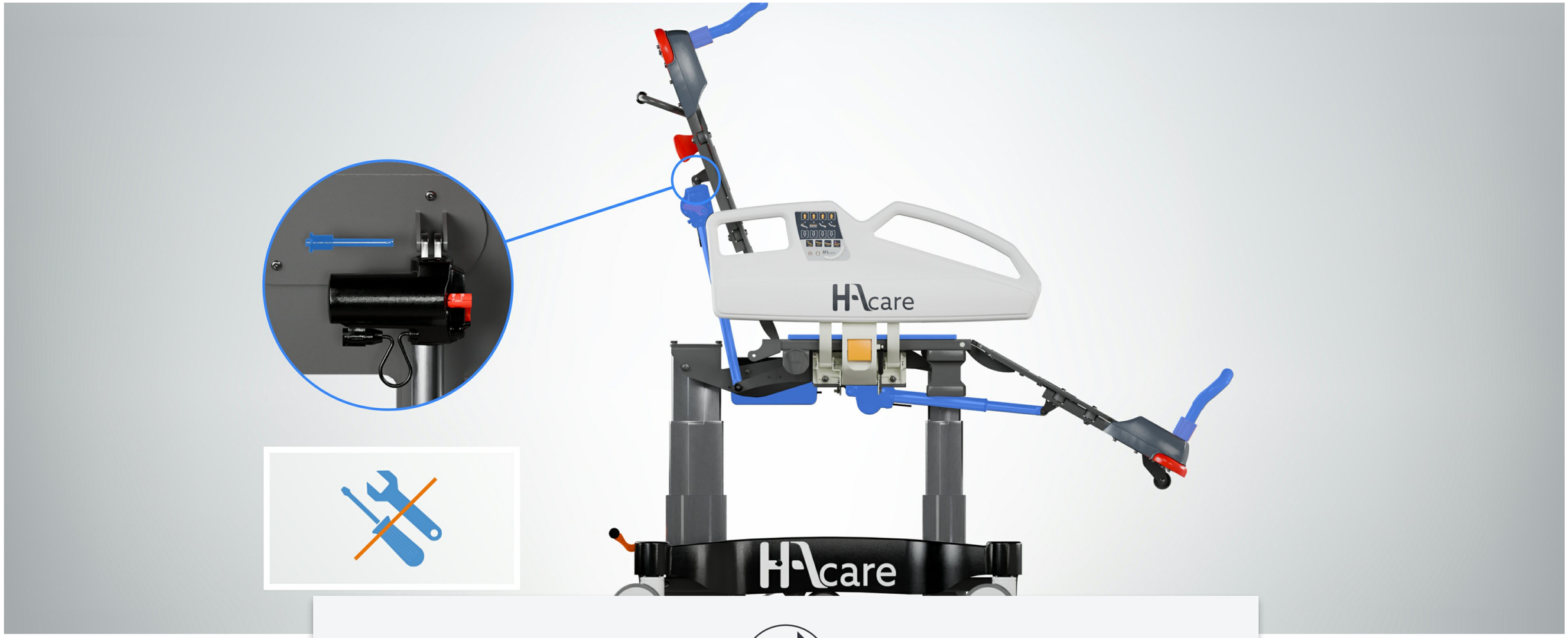

INTER CHANGEABILITY

Our devices have been designed to make everyday life easier for caregivers and technical teams: the **components** are **fully interchangeable without tools**, allowing for quick, safe, and hassle-free adjustments.
The **motors can be unclipped** without touching the wiring, which significantly reduces technical interventions and the risk of error.

This ingenious design **simplifies and speeds up after-sales service**, with a clear objective: to minimize equipment downtime, ensure continuity of care, and optimize the availability of your equipment.

The QR Code for accessing all information (Traceability)



The **QR Code,** found on each product, provides **access to key information** such as the product's destination, instructions for use, eco-responsibility, technical data sheets, installation assistance, etc.

This information is stored on our **SavTech** platform and **can be accessed** by scanning the QR Code.



CHARACTERISTICS

CHARACTERISTICS

Mobility



Mobility adapted to intensive use

Because travel is frequent and sometimes over long distances—outpatient care services, hospitals, dialysis centers—we offer **150 mm** diameter **wheels**, designed to provide smoother **rolling**, even on uneven surfaces or during more intensive stretcher transport.

A fifth central **steering and synchronized wheel** improves directional stability and facilitates **maneuverability** in narrow corridors or when turning, thereby reducing the effort required by nursing staff.

This choice of configuration allows each facility to customize the level of mobility according to its specific constraints, while ensuring **safety**, **comfort**, and logistical **efficiency**.



Smooth and ergonomic handling: effortless steering, lasting comfort

To meet the demands of transport in healthcare environments, our chair is equipped with **ergonomic push handles**, specially designed to **facilitate guidance** and reduce fatigue for caregivers, even during frequent movements or on difficult floors.

Combined with the Soft Sound system, these handles provide **optimal maneuverability**, ensuring **stable**, **smooth**, and **quiet movement**, even with a patient seated. Their design takes into account the realities of everyday hospital life: less effort, more control, whatever the conditions.

They offer a **large grip area** and a natural grip, suitable for all body types. This ergonomic design has been conceived to **limit the risk of musculoskeletal disorders** (MSDs) by preserving the movements and postures of healthcare staff.

CHARACTERISTICS

Side guards



Classic metal barriers

The ¾ **metal barriers** combine **safety** and **comfort** by avoiding total restraint of the patient, thus promoting greater freedom of movement while ensuring **effective protection**.
Designed to be **lightweight** and easy to handle, they are **easy** to **unlock**, making the daily work of nursing staff easier.
Their epoxy structure gives them **excellent resistance to impact** and wear, ensuring optimal durability even with intensive use.
Practical, **robust**, and **ergonomic**, these rails fit perfectly into the care environment, combining patient safety, **ease of use**, and **durability**.



Patient safety, caregiver comfort

Discreet when folded, the **Tech 2-position side rails** are integrated **under the sleeping surface**. They unfold easily to provide **optimal side protection** for the patient, particularly during rest periods, prolonged care, or transfers.

Their **ergonomic design** allows for smooth and quick installation, with a handling **assistance system** that reduces physical effort for caregivers. This feature is particularly valuable during repeated daily use, helping to **prevent musculoskeletal disorders** while optimizing care times.

Tech rails also facilitate patient positioning and transfer, ensuring **enhanced stability** without compromising accessibility, particularly for **patients with reduced mobility** or who are dependent on others.



Tech+ barriers with integrated controls

Tech+ barriers directly integrate the chair's **preprogrammed controls** for intuitive and efficient use.
On the patient side, they allow for **independent** control of the backrest, leg rest, and variable height, ensuring comfort and well-being at all times.
For caregivers, they provide access to essential functions, **in addition** to those dedicated to the patient, such as the **decline** and **CPR positions**, ensuring optimal responsiveness during care and emergency situations.
Easy to access and designed with a handling **assistance system**, they reduce effort, improve ergonomics, and offer lasting comfort, even with intensive use. The result: a perfect balance between patient autonomy, team efficiency, and enhanced safety.

Controls



The ergonomic remote control

Comfortable positioning in one simple step:

This simple maneuver facilitates the caregiver's work and helps optimize time during the caregiver-patient relationship.
Nursing
position in one simple step:

This control prevents caregivers from bending down when caring for patients and effectively combats MSDs.

Decline position in one simple step
Ensure safe emergency care and patient comfort with **a safety key** for the **decline function** and direct, simplified access to the prone and decline positions.
This saves time for caregivers and improves responsiveness on a daily basis.



Emergency slope at the foot

Because certain situations require a **rapid** and uncompromising **response**, our bed can be equipped with an **emergency foot pedal**. Placed within easy reach of the caregiver, this control allows the bed to **be instantly tilted** into the head-down position, without manual manipulation or loss of time.

This device is particularly useful in cases of vagal discomfort, a drop in blood pressure, or a medical incident requiring **immediate response**. It allows cerebral perfusion to be restored quickly, **while keeping the hands free** to monitor or assist the patient.

Simple, robust, and intuitive, the foot pedal meets the safety requirements of acute or prolonged care environments by enhancing the ability of caregivers to **respond quickly**.

CHARACTERISTICS

Pre-programmed functions



Nursing

The "Nursing" position can be accessed directly **with a single touch** thanks to the **pre-programmed** care buttons.

Intuitive and fast, this feature makes it easy to set up the ideal posture for daily care. It allows caregivers to work at the right height without having to bend over or perform multiple movements, thereby **reducing** fatigue and the risk of **musculoskeletal disorders.**

For the patient, it ensures **comfort** and **smooth care.**

A solution designed to optimize efficiency, ensure safe movements, and improve the well-being of everyone involved in care.



Patient Reception

The "Patient Reception" position is specially designed to **s e c u r e** and **facilitate transfers**. Recommended by occupational therapists: perfectly suited for receiving patients independently or with minimal assistance. This position, directly accessible **with a single touch** thanks to **pre-programmed buttons**, promotes patient confidence and comfort while simplifying the work of caregivers, who can assist with movements without excessive effort.

A solution that combines **safety**, **ergonomics**, and well-being, serving the daily needs of teams and patients.



Ultra-comfort (Zero gravity)

With our **intuitive pre-programmed control** system, a single press of the remote control is all it takes to access the **"Ultra-comfort" position**, also known as **"zero gravity."**

This ergonomic position has been designed to distribute body pressure evenly across the entire mattress. The pelvis, legs, and back are positioned in such a way as to promote **muscle relaxation**, **relieve joint tension**, and **stimulate blood circulation**, while reducing areas of compression.

This function plays a key role in improving perceived comfort, **preventing postural pain**, and enhancing the quality of care.



Emergency slope

The "Emergency Trendlenburg" position can be accessed **in a single step** using the **pre-programmed buttons.**

This function allows the patient to be quickly moved into the Trendlenburg position, which is essential in the event of discomfort or shock in order to **promote blood return** to the vital organs.

Designed to maximize **speed of action**, it ensures safe care while reducing the stress associated with critical situations.

Ergonomic and intuitive, this control provides caregivers with a **reliable** and **immediate tool**, ensuring efficiency, safety, and comfort during intervention.

Safety



Immediate responsiveness in critical situations

Because certain situations require a rapid and uncompromising response, our chair can be equipped with an optional **emergency tilt pedal**. Placed within easy reach of the caregiver, this control allows the chair to be instantly tilted into **the tilt position**, **without manual manipulation** or loss of time.

This device is particularly useful in cases of vagal discomfort, a drop in blood pressure, or a medical incident requiring **immediate response**. It allows cerebral perfusion to be restored quickly, while keeping the hands free to monitor or assist the patient.

Simple, robust, and intuitive, the tilt pedal meets the **safety** requirements of acute or prolonged care environments by enhancing the **ability** of caregivers **to respond quickly**.



CPR manual

Designed to ensure safety and responsiveness in all circumstances, the **backrest release system** is equipped with **two handles** (on both sides) that are easily accessible under the sleeping surface. Intuitively positioned, they allow caregivers to instantly release the actuator to **lower the backrest** or return it to a completely flat position in **an emergency**. This ergonomic design reduces complex maneuvers and ensures **rapid intervention**, thereby limiting patient stress and facilitating the work of medical teams. Reliable, simple, and secure, this device is an essential asset for **enhancing the quality of care** and the peace of mind of caregivers.

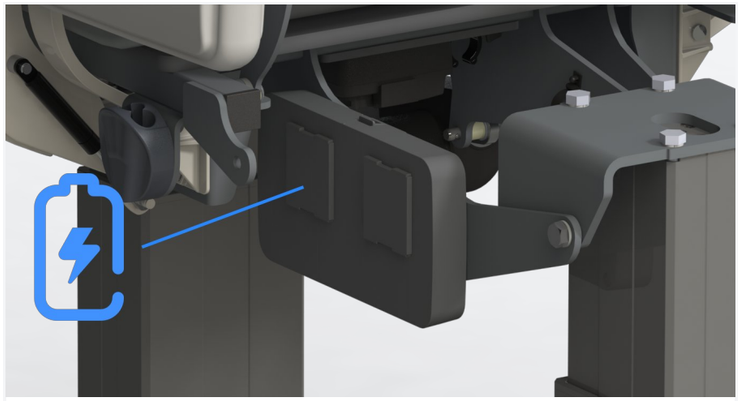

Integrated backup battery: guaranteed service continuity

To ensure maximum safety and continuity of care, our bed is equipped with a high-performance **backup battery** that automatically takes over in the event of a power failure. This autonomy allows caregivers to **maintain** all **essential** bed **functions**—position adjustments, backrest, leg rest, variable height—without interruption, even in the event of a power outage.

This solution not only guarantees patient safety and comfort by preventing any unexpected blockages, but also offers **peace of mind** to healthcare teams by ensuring **smooth** and stress-free **management** of **emergency situations**. Thanks to this battery, care can continue without compromise, regardless of the environment or circumstances.

CHARACTERISTICS

Lying surface



Make cleaning easier

Thanks to the **EasyClean®** solution, **cleaning the bed** is simple, quick, and effective. **Full access to the surfaces to be cleaned** without tools.

The result: a **complete wash** in a minimum of time, **impeccable hygiene**, and real comfort for nursing staff.

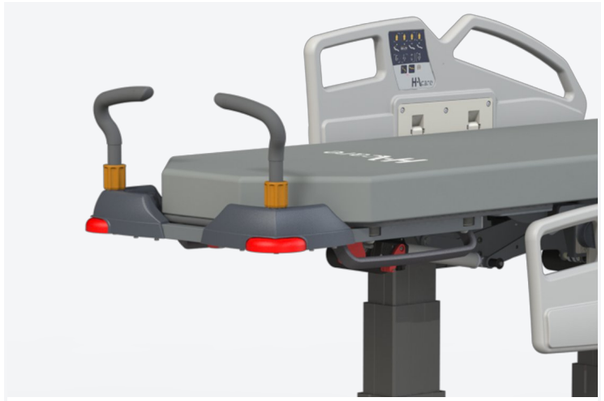

Corner guards for added safety and durability

The corner guards on the outpatient care bed provide enhanced safety for the patient, equipment, and care environment.

Equipped with a **built-in shock absorber**, they effectively **absorb shocks** during movement, even in tight spaces.
Their wraparound shape **limits the impact** of **collisions** with walls, doors, or furniture, while **preserving the structure** of the bed.

The result: **better patient protection**, **durable equipment,** and lower repair costs.

Designed for intensive use, they **extend the quality** and **longevity** of hospital equipment.



Mattress handles and Comfort mattresses

The outpatient care bed is equipped with **mattress handles** positioned around the entire perimeter of the **sleeping surface**, ensuring **perfect** mattress **stability**, even during repeated movements or handling. This design also makes **transfers safer** by **reducing** the risk of **slipping** or imbalance when moving the patient to another device.

For **superior comfort**, the **memory** foam conforms to the contours of the body, **limiting pressure points** and ensuring optimal well-being throughout the entire care process, including during long procedures or the recovery phase.

This dual device combines **safety**, **comfort**, and **peace of mind** for both patients and healthcare teams.



Head and foot stretcher handles

The **retractable push handles** have been designed to offer healthcare teams both **ease of use** and **optimized space**. Positioned **at the head or foot** of the bed as needed, they can be deployed with a simple movement to **facilitate maneuverability** and ensure **smooth**, **controlled** patient **transfer**. When **not in use**, they disappear discreetly into the bed frame, **completely freeing up the care space** and avoiding any obstruction. This intelligent design **reduces the physical effort** required by caregivers, while enhancing the **safety of maneuvers** and the **fluidity of** outpatient care **flows**. An ergonomic asset that combines practicality, space savings, and peace of mind on a daily basis.

Technical specifications

AMB7-S06P54-S800

STRETCHER BED AMB7 CLAVIA LSA - WIDTH 65 - CENTRALIZED BRAKING WITH 5TH CASTOR - COMFORT MATTRESS - TECH SIDERAILS

PACK - EQUIPMENT

Side Rails	Plastic with 2-position assistance, high for safety and low for easy access
Mattress	Removable comfort mattress
Equipment	2 Push bars - Bumpers on 4 corners with holder for accessories

WEIGHT - ECO-PERFORMANCE

Weight	105 kg

DIMENSIONS

Length	Chair position: 160 / Lying position: 219 cm cm
Width	78,5 cm
Length sleeping surface	202 cm
Width sleeping surface	65 cm
Variable height minimum	Sleeping surface without mattress: 47 cm
Variable height maximum	Sleeping surface without mattress: 85 cm
Ground Clearance	4 cm
Dimensions (cm)	Backrest 80 cm cm
Mattress thickness	10 cm
Side rails height	37 cm
Side rails length	94 cm
Side rails thickness	6 cm
Height of the push handle	Chair position: de 70 à 105 cm
Push bar length	40 cm
Push bar diameter	3 cm

MATERIAL & COATING

Material Foam	Hight resilience foam
Foam HR density	35 kg/m3
Material Cover	Techmaflex fabric
Frame	Plastic protection cover / Steel epoxy structure
Variable height	Steel column

TYPE

Type of mattress	Standard Comfort
Class Mattress	Class 0
Variable height type	Electric
Type of engine	PI-Type
Type of brake	Centralized brake system with 5th directional wheel

BASE

Type of footing	Castor - Double roller
Wheels diameter	150 mm

MOBILITY

Type of battery	Lithium-Ion 2,5A (50 cycles)
Charging time	about 10 heure
Consumption at rest	0,5 (120/230V)
Consumption in function	on maximum connected 12A - on maximum battery 15A
Consumption in charge	1A

INCLINATIONS

Backrest	0 to 78°
Legrest	0 to 54°
Reverse Trendelenburg	10°
Trendelenburg	15°

SAFETY CHARGE

Maximum patient weight	185 kg
SWL	250 kg

CONFIGURATION

Configuration	Electrical variable height / Electric backward tilt function / Electric backrest with emergency cpr / Electric legrest / 2 section backrest with a removable head section to fasten a surgery head rest for ophthalmology, stomatology and ENT
Number of IV pole support	2 slots on the seat

REGULATION

Medical device class	Class I
CE marking	CE
European regulation (UE 2017/745)	Yes

FIRE CLASSIFICATION

Mattress cover	M1
Vegetable fibers	M1

ADDITIONAL INFORMATION

Comment	6 programmed positions: Welcome, Relax, Reverse Trend, Secured Trendelenburg position, CPR



OUR EXCLUSIVES

SOFT SOUND® · EASY MOV'® · TECH+ SIDE RAILS® · EASY CLIP®

HIGHLIGHTS

- Pre-programmed functions
- Optimizing space
- Interchangeability
- Traceability

CE MD

Technical specifications

AMB7-S07P54-S800

STRETCHER BED AMB7 CLAVIA LSA - WIDTH 75 - CENTRALIZED BRAKING WITH 5TH CASTOR - COMFORT MATTRESS - TECH SIDERAILS

PACK - EQUIPMENT

Side Rails	Plastic with 2-position assistance, high for safety and low for easy access
Mattress	Removable comfort mattress
Equipment	2 Push bars - Bumpers on 4 corners with holder for accessories

WEIGHT - ECO-PERFORMANCE

Weight	107 kg

DIMENSIONS

Length	Chair position: 160 / Lying position: 219 cm cm
Width	88,5 cm
Length sleeping surface	202 cm
Width sleeping surface	75 cm
Variable height minimum	Sleeping surface without mattress: 47 cm
Variable height maximum	Sleeping surface without mattress: 85 cm
Ground Clearance	4 cm
Dimensions (cm)	Backrest 80 cm cm
Mattress thickness	10 cm
Side rails height	37 cm
Side rails length	94 cm
Side rails thickness	6 cm
Height of the push handle	Chair position: de 70 à 105 cm
Push bar length	40 cm
Push bar diameter	3 cm

MATERIAL & COATING

Material Foam	Hight resilience foam
Foam HR density	35 kg/m3
Material Cover	Techmaflex fabric
Frame	Plastic protection cover / Steel epoxy structure
Variable height	Steel column

TYPE

Type of mattress	Standard Comfort
Class Mattress	Class 0
Variable height type	Electric
Type of engine	PI-Type
Type of brake	Centralized brake system with 5th directional wheel

BASE

Type of footing	Castor - Double roller
Wheels diameter	150 mm

MOBILITY

Type of battery	Lithium-Ion 2,5A (50 cycles)
Charging time	about 10 heure
Consumption at rest	0,5 (120/230V)
Consumption in function	on maximum connected 12A - on maximum battery 15A
Consumption in charge	1A

INCLINATIONS

Backrest	0 to 78°
Legrest	0 to 54°
Reverse Trendelenburg	10°
Trendelenburg	15°

SAFETY CHARGE

Maximum patient weight	185 kg
SWL	250 kg

CONFIGURATION

Configuration	Electrical variable height / Electric backward tilt function / Electric backrest with emergency cpr / Electric legrest / 2 section backrest with a removable head section to fasten a surgery head rest for ophthalmology, stomatology and ENT
Number of IV pole support	2 slots on the seat

REGULATION

Medical device class	Class I
CE marking	CE
European regulation (UE 2017/745)	Yes

FIRE CLASSIFICATION

Mattress cover	M1
Vegetable fibers	M1

ADDITIONAL INFORMATION

Comment	6 programmed positions: Welcome, Relax, Reverse Trend, Secured Trendelenburg position, CPR



OUR EXCLUSIVES

SOFT SOUND® · EASY MOV'® · TECH+ SIDE RAILS® · EASY CLIP®

HIGHLIGHTS

- Pre-programmed functions
- Optimizing space
- Interchangeability
- Traceability

CE MD



OPTIONS & ACCESSORIES

Options

ELECTRICAL CONTROLS

OPTION - EQUIPOTENTIAL CONNECTION

OPAM-70002

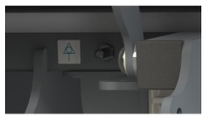

ELECTRICAL CONTROLS

ANTI-STATIC SYSTEM

OPAM-70003



SECURITY

CABLE REEL

OPAM-70033



BARRIERS

POLYCARBONATE PAEDIATRIC SIDE RAILS (INSTEAD OF THE STANDARD SIDE RAILS)

OPAM-70011



CONTAINER HOLDER

PAPER ROLL DISPENSER - NOT COMPATIBLE WITH HOLDER FOR OXYGEN CYLINDER (OPAM-70012)

OPAM-70006



CONTAINER HOLDER

HOOKS TO HOLD BAGS

OPAM-70008



CONTAINER HOLDER

HOLDER FOR OXYGEN CYLINDER - NOT COMPATIBLE WITH PAPER ROLL DISPENSER (OPAM-70006)

OPAM-70012



HANDLES

FOLDABLE PUSH BARS FOOT-END

OPAM-70009



HANDLES

FOLDABLE PUSH BARS HEAD-END

OPAM-70010



COMFORT

SUPPORTS FOR MEAL SHELF

OPAM-70005



COMFORT

EMERGENCY FOOT SWITCH WITH EMERGENCY FOOT RELEASE ON BOTH SIDES

OPAM-70024



COMFORT

SET OF TECH PLUS SIDE RAILS WITH BUILT-IN CONTROLS - FOR AMB7 WIDTH 65

OPAM-70029



COMFORT

OPTION HIGH COMFORT MATTRESS - VISCOELASTIC - WIDTH 75 CM - HEIGHT 12 CM

OPAM-M577



COMFORT

OPTION HIGH COMFORT MATTRESS - VISCOELASTIC - WIDTH 65 CM - HEIGHT 12 CM

OPAM-M567



COMFORT

SET OF TECH PLUS SIDE RAILS WITH BUILT-IN CONTROLS - FOR AMB7 WIDTH 75

OPAM-70031



COMFORT

OPTION ADJUSTABLE HEAD CUSHION 70 X 45 CM

OPAM-90013



COMFORT

SET OF 3/4 SIDE RAILS - FOR AMB7 WIDTH 75

OPAM-70034



COMFORT

SET OF 3/4 SIDE RAILS - FOR AMB7 WIDTH 65

OPAM-70032



COMFORT

OPTION REMOVABLE CRYSTAL PROTECTION FOR LEG REST

OPAM-90002



Accessories

IV POLE

REMOVABLE IV POLE, 2-STAGE, 2 HOOKS

ACAM-90007



IV POLE

REMOVABLE IV POLE, 2-STAGE, 4 HOOKS

ACAM-90008



IV POLE

OPTION - REMOVABLE IV POLE, 2-STAGE, 2 HOOKS

OPAM-90007



IV POLE

OPTION REMOVABLE IV POLE, 2-STAGE, 4 HOOKS

OPAM-90008



COMFORT

REMOVABLE CRYSTAL PROTECTION FOR LEG REST

ACAM-90002



COMFORT

HIGH COMFORT MATTRESS - VISCOELASTIC - WIDTH 65 CM - HEIGHT 12 CM

ACAM-M567



COMFORT

HIGH COMFORT MATTRESS - VISCOELASTIC - WIDTH 75 CM - HEIGHT 12 CM

ACAM-M577



COMFORT

ADJUSTABLE HEAD CUSHION 70 X 45 CM

ACAM-90013



SURFACE

MEAL SHELF 60x40 CM (OPAM-70005 COMPULSORY)

ACAM-90009



SURFACE

OPTION MEAL SHELF 60x40 CM

OPAM-90009



Preventive maintenance tailored to your needs

The maintenance of medical devices is not only a **technical obligation**, but also a **legal** and regulatory responsibility of the organisation.

It is based on:

- A clear policy
- Traceability procedures
- The use of compliant parts
- And staff training

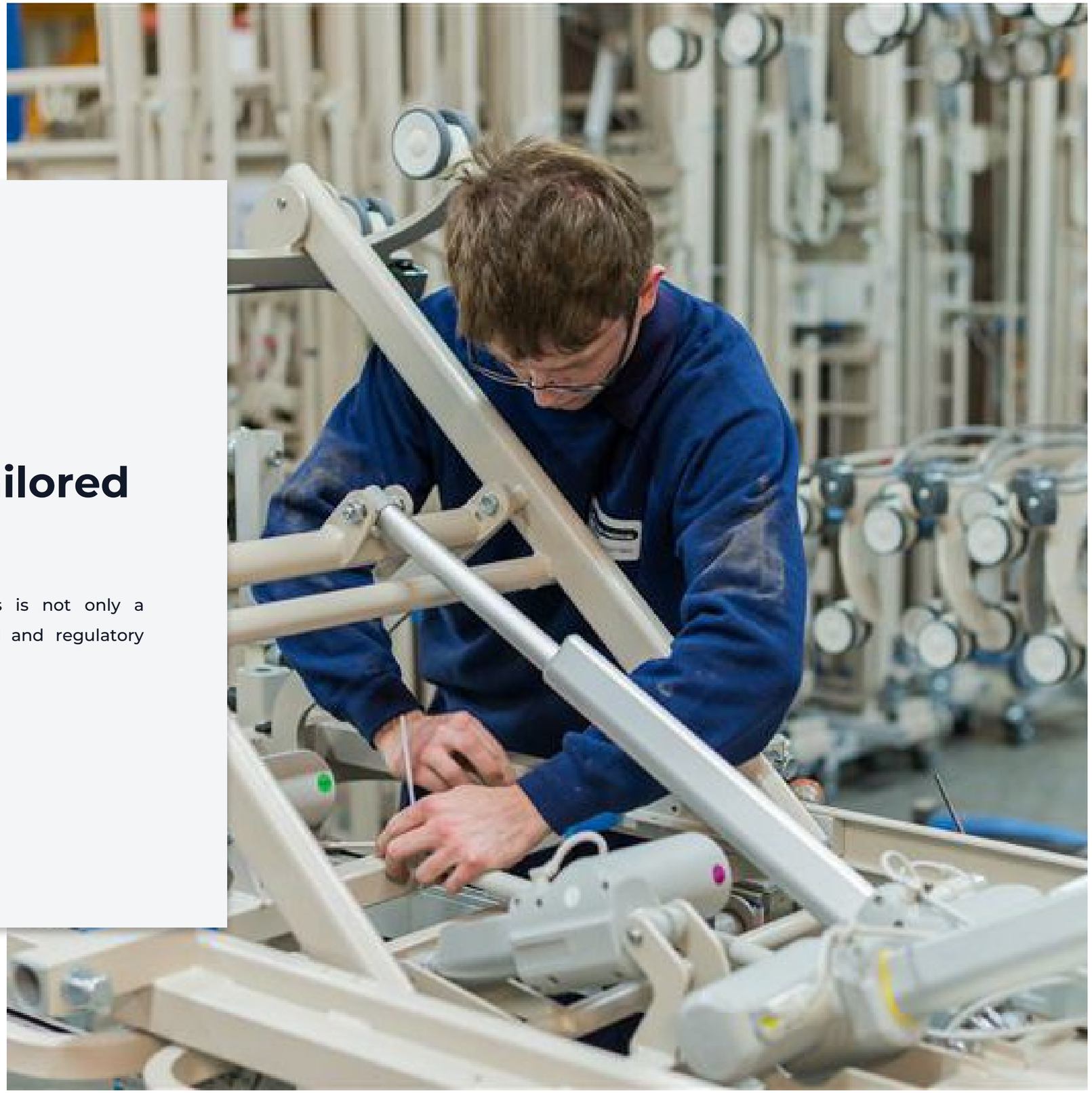

The advantages of preventive maintenance

THE BENEFITS OF REGULAR MAINTENANCE OF YOUR EQUIPMENT

- Improved performance: maximum fleet availability.
- Improved quality: a reliable and continuous service.
- Lower costs: reduced repair costs.
- Fewer breakdowns: continuity guaranteed.

EXTEND THE LIFESPAN OF YOUR EQUIPMENT & ENSURE SAFETY

Our maintenance programmes are designed to:
- Ensure your equipment performs to its full potential.
- Provide regular checks and reliable diagnostics.
- Safeguard the safety of patients, residents and carers.
- Maintain your organisation’s regulatory compliance.

A BUDGET UNDER CONTROL

Our maintenance solutions help you to:
- Plan your expenditure.
- Avoid unexpected costs.
- Optimise your investments with complete transparency.

CERTIFIED COMPONENTS FOR SUSTAINABLE VIABILITY

All our services are carried out using original parts that have been tested and approved, guaranteeing:
- Maximum safety when using your equipment.
- Strict compliance with regulatory standards.
- The durability and reliability of your beds, mattresses and accessories.

Our preventive maintenance services



A SINGLE POINT OF CONTACT FOR A COMPREHENSIVE SOLUTION

From pre-sales to after-sales, we support you every step of the way.

Through a **detailed analysis** of your needs, we provide **tailored technical support**, based on a **long-term** and **effective** partnership.

EXPERTS AT YOUR SIDE

Our technicians and engineers, who receive regular training in the latest innovations, guarantee you:
- A responsive, high-quality service.
- Professional installation of your equipment.
- Comprehensive training for your teams, delivered directly on-site.

OUR TECHNICIANS CARRY OUT A FULL INSPECTION

- Mechanical inspection: assembly, joints, brakes, locking mechanisms.
- Electrical inspection: components, controls, sensors.
- Safety features: barriers, locking systems, protective devices.
- Lubrication: re-greasing of all pivot points.
- Electrical tests: carried out in accordance with current standards.

Each operation (inspection, adjustment, replacement) is recorded in the technician’s maintenance report.

RENOVATION OF THE PARK

Following the visit, our preventive maintenance team will email you the **maintenance report** completed for each piece of equipment.
The **service reports** are sent to your HAcare contact, who will draw up the necessary quotes for repairs or replacements.

This provides you with **comprehensive** and **transparent** tracking of the **maintenance** of your equipment fleet.

The result: a clear and traceable process that guarantees the safety, compliance and availability of your equipment. Translated with DeepL.com (free version)

BMB MEDICAL

ZAC de Fourquevaux, 100 avenue du Formans
01600 - TRÉVOUX, FRANCE

Tél +33 (0)4 74 08 71 71
export@hacare.com

Sales in the French Overseas Departments and Communities (DROM-COM)
f.milloux@hacare.com
06 25 83 86 00

International Export Department
export@hacare.com
+33 (0)4 74 08 71 71

Sales assistant
export@hacare.com
+33 (0)4 74 08 71 71

HAcare

MEDICAL

1860

MKT-26-PO-HOP-AMB-SA-FSA-AMLSA-EN
2026