HOSPITAL



AMBULATORY CARE CHAIRS AND BEDS SIDE RAILS (TECH) - UPHOLSTERY - AMB7 FSP (CLAVIA)

SOFT SOUND® · EASY MOV'® · TECH+ SIDE RAILS® · EASY CLEAN®

Day care unit - Outpatient care

greenly 2024 Or Climate Strategy Rating TOP 5%

MKT-26-PO-HOP-AMB-SA-FSA-AMFSP-EN 21/11/2026

Summary

HAcare, specialist in medical devices since 1860. 3

HAcare Group's eco-responsible commitments 4

Choose the circular economy 5

Recyclable materials 6

Certifications 7

Ambulatory care chairs and beds Hospital Outpatient care 8

Our exclusives

- Soft Sound 10
- Easy MOV 11
- Tech + side guards 12
- Easy CLEAN 13

Highlights

- Patient safety, caregiver comfort (Tech side rails) 15
- Customization of coatings (Configurable) 16
- Ultra-comfort in a single step (Pre-programmed functions) 17
- Optimize the treatment area (Easy Clip) 18
- Facilitate maintenance (Interchangeability) 19
- The QR Code for accessing all information (Traceability) 20

Characteristics

- Side guards 22
- Mobility 23
- Controls 24
- Pre-programmed functions 25
- Safety 26
- Lying surface 27

Technical specifications 28

Options & Accessories 30

Preventive maintenance tailored to your needs 33

The advantages of preventive maintenance 34

Our preventive maintenance services 35



HAcare, specialist in medical devices since 1860.

At HAcare, we design, manufacture and distribute medical devices and innovative, durable medical furniture solutions designed to improve the daily lives of patients and healthcare professionals alike.

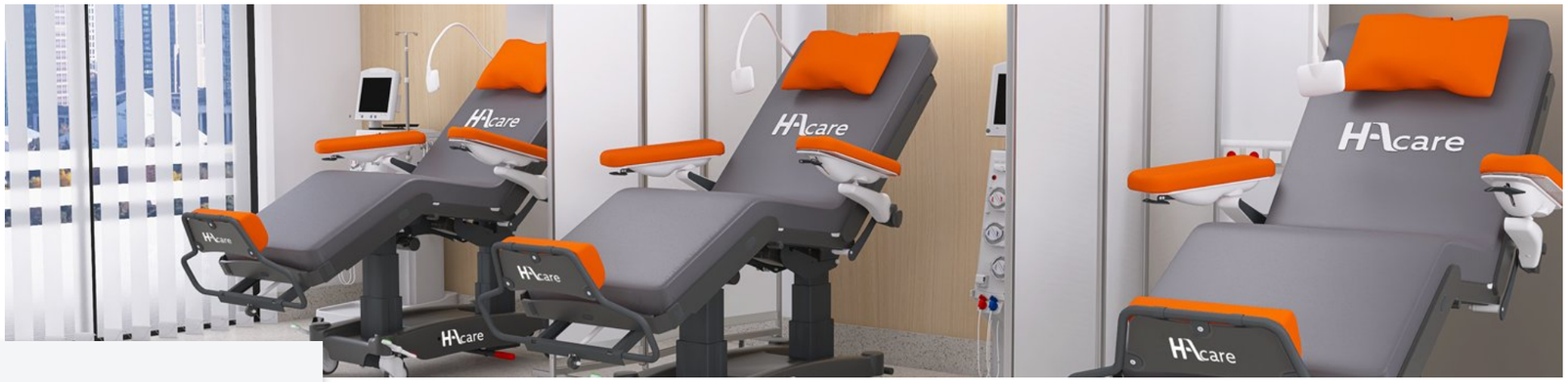









The HAcare Group's eco-responsible commitments

The HAcare group commits to an **eco-responsible industrial orientation**

In its sustainable development strategy, the HAcare group has defined a list of **6 commitments** that guide its **actions and decisions** since the group's creation and for the years to come.

Indicators have been set up for each commitment.

Our 6 commitments

- Made in France production
- The use of renewable resources
- Integrating the circular economy into all new product developments
- Responsible purchasing (supplier quality monitoring)
- Daily actions to respect and protect the environment
- Combating RSI and noise pollution through our products

Choose the circular economy



HAcare finished products can be recycled through a recovery circuit at the end customer's premises, for recycling with our partner supplier. As wood cannot be recycled ad infinitum because its fibers become too small or exhausted, wood waste is recovered and transformed into green energy.



The plant fiber boards used in the manufacture of HAcare products are 100% reclaimed wood. Each HAcare finished product bears an index revealing the proportion of plant fiber contained.



Recycling is the practice of recovering used materials from the waste stream, then incorporating these same materials into the manufacturing process. Each HAcare finished product carries an index revealing the proportion of recycled material it contains.



Recyclable materials

HAcare finished products are 95% recyclable. For example, the HAcare medical bed is entirely recyclable, except for the wheels and motors. Each bed can be dismantled to recover each material separately: plant fiber, metal, plastic.

PLANT FIBER



Recycled wood

The plant fiber boards used in the manufacture of HAcare Group products are:

100% reused wood

Reuse is one of the environmentally friendly processes. It involves, for example, leftovers from wood-processing companies (e.g. sawmill scraps, production offcuts...). But also by-products from activities such as sustainable forest management and slope maintenance.

100% FSC-certified wood

Recyclable with a partner supplier who, on a worldwide exclusive basis and since 2021, recycles MDF and HDF panels.No water consumption, nor green energy **biomass**.

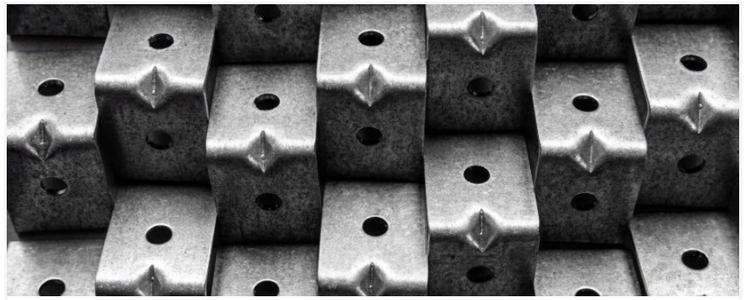

The metal

All metal components are **recyclable** and reusable, **infinitely**. Once the metal has been sorted, it is compressed, crushed, rolled and melted. It is then remolded into coils, bars or wire for reuse. This process can be endless!

Metal recycling has **many advantages**. It conserves natural resources by reducing the need for virgin materials, cuts energy consumption and reduces **greenhouse gas emissions**.



Recycled plastic

At recycling plants, waste (re) becomes a **raw material** through various processes: grinding, micronization, regeneration of plastics.

The recycled plastic will then be resold to **plasturgy** manufacturers in the form of **flakes**, powder or even **granules**.

Certifications



MANAGEMENT AND CUSTOMER SATISFACTION
ISO 9001

MEDICAL DEVICE
ISO 13485

GOLD | Top 5%
ecovadis
Sustainability Rating
MAY 2026

greenly
2024
Or
Climate Strategy Rating
TOP 5%

AMBULATORY CARE CHAIRS AND BEDS HOSPITAL

Outpatient care

Side rails (TECH) - Upholstery - AMB7 FSP (CLAVIA)





OUR EXCLUSIVES

OUR EXCLUSIVES

Soft Sound

Over the past 40 years, the average noise level in hospitals has increased by 15 decibels (dB), reaching levels of around 70 dB, well above the WHO recommended limit of 35 dB for a healthcare environment. HAcare products are designed to combat noise pollution.The goal is to reduce noise by 20 dB by adding shock absorbers to all rolling and stretcher-mounted structures.

SOFT SOUND®

Combating noise pollution

Anti-vibration support, **high-performance shock absorber**: for **smooth**, **quiet**, and **comfortable transport**, even when crossing thresholds or exiting elevators.**Noise pollution is significantly reduced.**

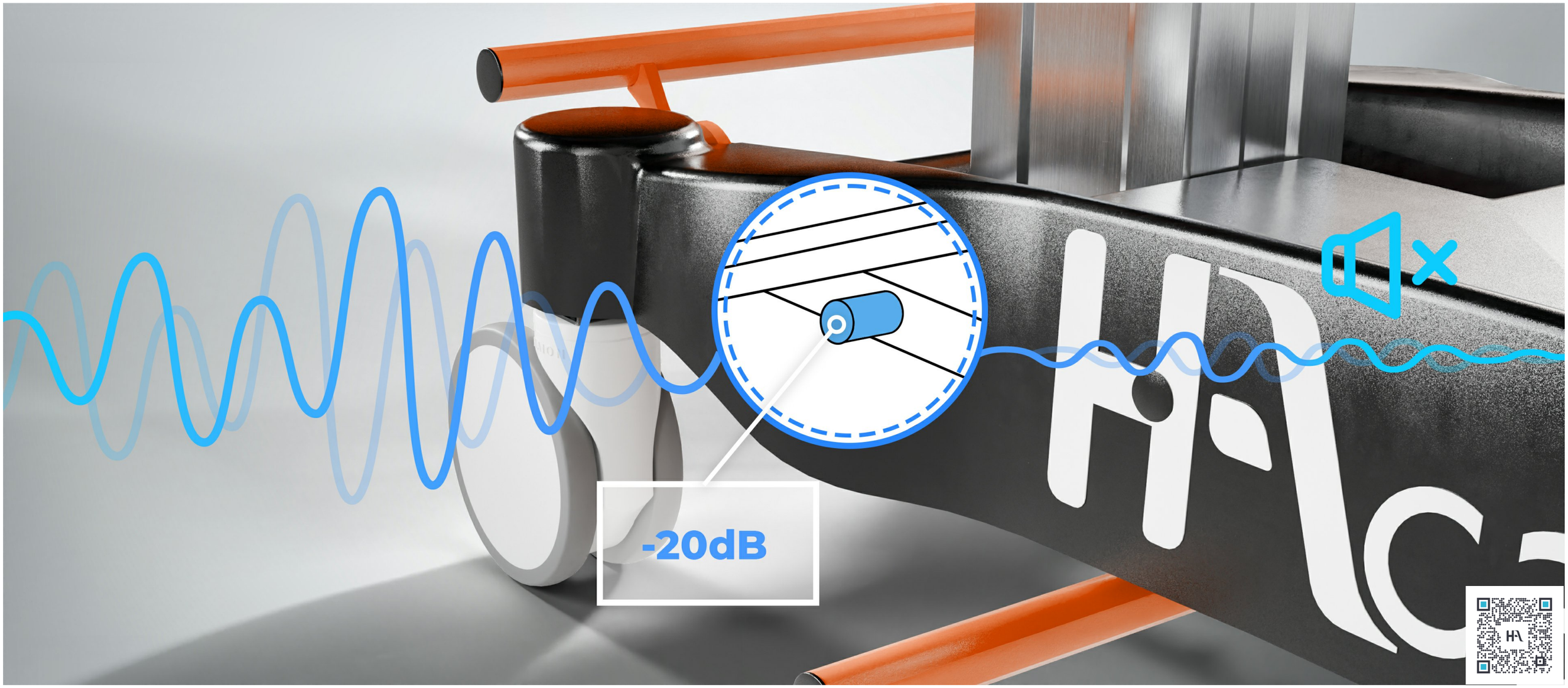

OUR EXCLUSIVES

Easy MOV

In a hospital environment where every action counts, protecting the health of caregivers while ensuring patient safety is essential. Stretcher transport, an activity with a high risk of MSDs due to repeated exertion and awkward postures, requires appropriate solutions. Designed to reduce strain and optimize movement, our medical devices become true everyday allies, improving comfort, ergonomics, and quality of life at work.

Combating musculoskeletal disorders

Ergonomic handles, double casters, and **a synchronized fifth steering wheel** for **optimal maneuverability**. Designed to reduce musculoskeletal disorders and adapt to all body types.



OUR EXCLUSIVES

Tech + side guards

Over the past 40 years, the average noise level in hospitals has increased by 15 decibels (dB), reaching levels of around 70 dB, well above the WHO recommended limit of 35 dB for a healthcare environment. HAcare products are designed to combat noise pollution.The goal is to reduce noise by 20 dB by adding shock absorbers to all rolling and stretcher-mounted structures.

TECH+ Side Rails with integrated controls

Autonomy and comfort for **patients**, ergonomics and **responsiveness** for **caregivers**. Easy to access and assisted, they **facilitate every movement**, even during intensive use.



OUR EXCLUSIVES

Easy CLEAN

In a hospital setting where hygiene is essential, every minute of cleaning counts. Staff must ensure thorough disinfection while maintaining a steady pace. EasyClean® addresses this challenge by simplifying cleaning: protocols are followed without compromise, and the workload is reduced. The result: less effort, less time wasted, and enhanced safety for everyone. EasyClean® guarantees a cleaner, safer, and more ergonomic environment, improving the quality of care.

EASY CLEAN®

Make cleaning easier

Disassembly and **cover removal** (via buttonholes) **without tools** for quick, **thorough cleaning**, **perfect hygiene**, and real comfort for nursing staff.

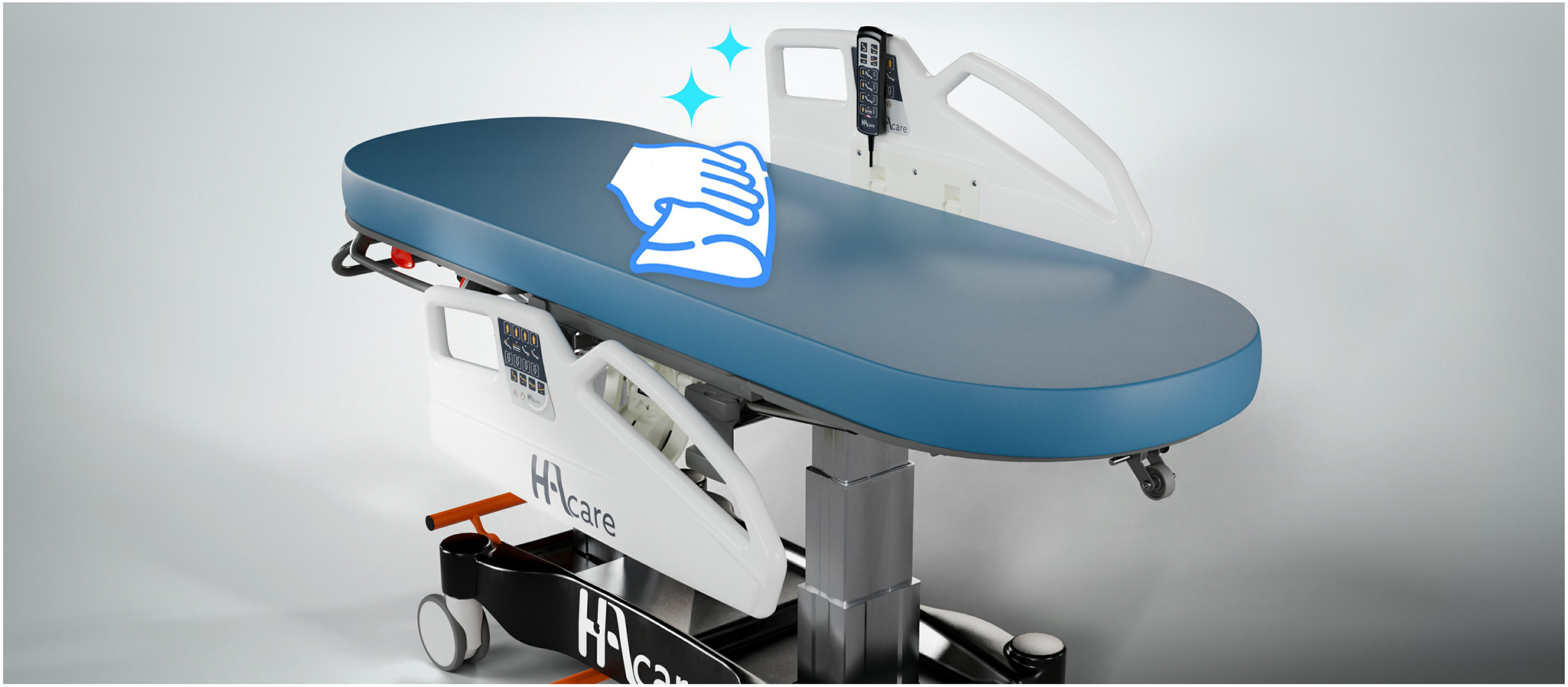



HIGHLIGHTS

Patient safety, caregiver comfort (Tech side rails)



TECH
SIDE RAILS

Discreet when folded, the **2-position TECH side rails** are integrated **under the bed surface**. They unfold easily to provide **optimal side protection** for the patient, particularly during rest periods, prolonged care, or transfers.

Their **ergonomic design** allows for smooth and quick installation, with a handling **assistance system** that reduces physical effort for caregivers. This feature is particularly valuable during repeated daily use, helping to **prevent musculoskeletal disorders** while optimizing care times.

Side Rails also facilitate patient positioning and transfer, ensuring **enhanced stability** without compromising accessibility, particularly for **patients with reduced mobility** or who are dependent on others.

Customization of coatings (Configurable)



Because every detail counts in the healthcare experience, a **wide range of colors** and designs allows you to create **harmonious**, welcoming, and **easily identifiable spaces** that are particularly well suited to outpatient services. Headrests, footrests, and upholstery can be customized to **blend in with your environment**. A solution that combines comfort, aesthetics, and visual identity for the benefit of patients and caregivers alike.

Ultra-comfort in a single step (Pre-programmed functions)



With our **intuitive pre-programmed control** system, a single press of the remote control is all it takes to access the **"Ultra-comfort" position**, also known **as "Zero gravity** position."

This ergonomic position has been designed to distribute body pressure evenly across the entire mattress. The pelvis, legs, and back are positioned in such a way as to promote **muscle relaxation**, **relieve joint tension**, and **stimulate blood circulation**, while reducing areas of compression.

Cette fonction joue un rôle clé dans l'amélioration du confort perçu, la **prévention** des **douleurs posturales** et l'amélioration de la qualité de la prise en charge.

Optimize the treatment area (Easy Clip)



EASY CLIP

With the **EasyClip®** concept, you can work more efficiently and comfortably. This **intuitive**, **tool-free**, effortless **attachment** system makes it easy to **position**, move, or remove **accessories**. EasyClip® is **fully customizable** and adapts to the specific needs of each patient, regardless of the type of condition.

Facilitate maintenance (Interchangeability)



INTER CHANGEABILITY

Our equipment has been designed to make everyday life easier for caregivers and technical teams: the **components** are **fully interchangeable without tools**, allowing for quick, safe, and hassle-free adjustments.
The **motors can be unclipped** without touching the wiring, which significantly reduces technical interventions and the risk of error.

This ingenious design **simplifies and speeds up after-sales service**, with a clear objective: to minimize equipment downtime, ensure continuity of care, and optimize the availability of your equipment.

The QR Code for accessing all information (Traceability)



The **QR Code,** found on each product, provides **access to key information** such as the product's destination, instructions for use, eco-responsibility, technical data sheets, installation assistance, etc.

This information is stored on our **SavTech** platform and **can be accessed** by scanning the QR Code.



CHARACTERISTICS

CHARACTERISTICS

Side guards



Patient safety, caregiver comfort

Discreet when folded, the **Tech 2-position side rails** are integrated **under the sleeping surface**. They unfold easily to provide **optimal side protection** for the patient, particularly during rest periods, prolonged care, or transfers.

Their **ergonomic design** allows for smooth and quick installation, with a handling **assistance system** that reduces physical effort for caregivers. This feature is particularly valuable during repeated daily use, helping to **prevent musculoskeletal disorders** while optimizing care times.

Side Rails also facilitate patient positioning and transfer, ensuring **enhanced stability** without compromising accessibility, particularly for **patients with reduced mobility** or who are dependent on others.



TECH+ Side Rails with integrated controls

Tech+ side rails directly integrate the chair's **preprogrammed controls** for intuitive and efficient use.
On the patient side, they allow for **independent** control of the backrest, leg rest, and variable height, ensuring comfort and well-being at all times.
For caregivers, they provide access to essential functions, **in addition** to those dedicated to the patient, such as **Reverse Trendelenburg** and **CPR positions**, ensuring optimal responsiveness during care and emergency situations.
Easy to access and designed with a handling **assistance system**, they reduce effort, improve ergonomics, and offer lasting comfort, even with intensive use. The result: a perfect balance between patient autonomy, team efficiency, and enhanced safety.

CHARACTERISTICS

Mobility

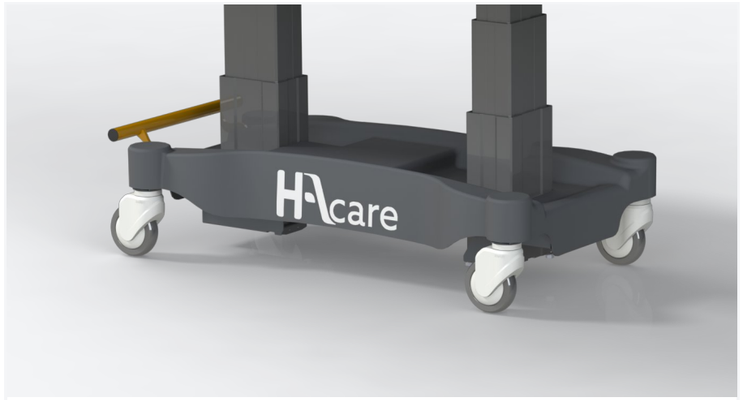

Smooth mobility and guaranteed stability: 125 mm wheels with centralized braking

The chair is equipped with large-diameter wheels (125 mm), designed to offer **optimal mobility** on all types of flooring.
Thanks to their size, they allow for **smooth**, **effortless movement**, even over long distances or with a patient seated in the chair.

To ensure safety at every stage, the chair is equipped with an **independent (or optional centralized) braking system**. With a single movement, the caregiver can lock or release all the wheels, ensuring maximum stability when positioning the patient, providing care, or transferring them.

This device combines **ergonomics**, **safety,** and **efficiency**, meeting the demands of dynamic care environments while making the daily lives of teams easier.

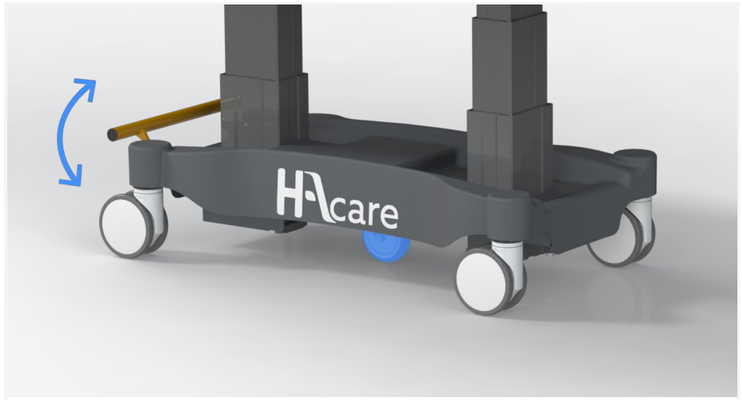

Mobility tailored to every need: a choice of wheels for intensive use

Because mobility needs vary depending on the service and use, our wheelchair is available with **different wheel configurations** to ensure optimal maneuverability in all situations.

For facilities where movement is frequent and sometimes over long distances—outpatient care services, hospitals, dialysis centers—we offer optional **150 mm** diameter **wheels**, designed to provide **smoother rolling**, even on uneven surfaces or during **more intensive stretcher transport**.

A fifth central wheel can be added to improve **directional stability** and **facilitate maneuverability** in narrow corridors or when turning, thereby reducing the effort required by nursing staff.

This choice of configuration allows each facility to customize the level of mobility according to its specific constraints, while ensuring safety, comfort, and logistical efficiency.



Smooth and ergonomic handling: effortless steering, lasting comfort

To meet the demands of transport in healthcare environments, our chair is equipped with **ergonomic push handles**, specially designed to **facilitate guidance** and reduce fatigue for caregivers, even during frequent movements or on difficult floors.

Combined with the Soft Sound system, these handles provide **optimal maneuverability**, ensuring **stable**, **smooth**, and **quiet movement**, even with a patient seated. Their design takes into account the realities of everyday hospital life: less effort, more control, whatever the conditions.

They offer a **large grip area** and a natural grip, suitable for all body types. This ergonomic design has been conceived to **limit the risk of musculoskeletal disorders** (MSDs) by preserving the movements and postures of healthcare staff.

Controls



The ergonomic remote control

Comfort position in one simple step:

This simple maneuver facilitates the caregiver's work and helps optimize time during the caregiver-patient relationship. **Nursing**
position in one simple step:

This control prevents caregivers from bending down when caring for patients and effectively combats MSDs.

Reverse Trendelenburg position in one simple step
Ensure safe emergency care and patient comfort with **a safety key** for the **Reverse Trendelenburg function** and direct and simplified access to the Trendelenburg and Reverse Trendelenburg positions. This provides time saving for caregivers and improves responsiveness on a daily basis.



The ergonomic patient satellite

Its ergonomic design promotes patient **autonomy**. Patients can easily control the chair's various functions. When not in use, patients can simply position the satellite to the side.
The control satellite features **LED lighting** to improve **reading comfort**, even during long treatment sessions.
It is also equipped with a **USB port**, allowing patients to easily recharge their phones or entertainment devices independently.

To adapt to each dialysis treatment situation, the satellite can be positioned **on the left or right side** of the backrest without tools, offering **optimal accessibility** for both the patient and the caregiver and **adapting** perfectly to **the layout.**

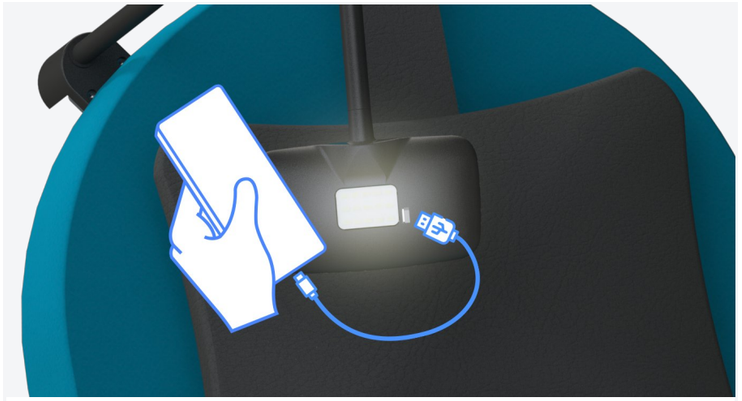

Integrated LED light and USB port for patient comfort

Because patient well-being is not limited to posture, our chair incorporates a **multifunctional satellite** designed to provide **comfort** and **independence** during prolonged care.
This module is equipped with an adjustable **LED lamp**, ideal for providing **soft, targeted lighting**, facilitating reading, writing, or simply a moment of relaxation during care.
It allows patients to remain active without interfering with care or disturbing the care environment.

The satellite also has a **built-in USB port**, allowing easy charging of phones, tablets, or other electronic devices.
This feature is designed to **preserve social connections**, keep in touch with loved ones, or simply enjoy entertainment content during waiting times.

CHARACTERISTICS

Pre-programmed functions



Nursing

The "Nursing" position can be accessed directly **with a single touch** thanks to the **pre-programmed** care buttons.
Intuitive and fast, this feature makes it easy to set up the ideal posture for daily care. It allows caregivers to work at the right height without having to bend over or perform multiple movements, thereby **reducing** fatigue and the risk of **musculoskeletal disorders.**
For the patient, it ensures **comfort** and **smooth care.**
A solution designed to optimize efficiency, ensure safe movements, and improve the well-being of everyone involved in care.



Ultra Comfort (Zero Gravity)

With our **intuitive pre-programmed control** system, a single press of the remote control is all it takes to access the **"Ultra-comfort" position**, also known as **"zero gravity."**

This ergonomic position has been designed to distribute body pressure evenly across the entire mattress. The pelvis, legs, and back are positioned in such a way as to promote **muscle relaxation**, **relieve joint tension**, and **stimulate blood circulation**, while reducing areas of compression.

Cette fonction joue un rôle clé dans l'amélioration du confort perçu, la **prévention** des **douleurs posturales** et l'amélioration de la qualité de la prise en charge.



Patient Reception

The "Patient Reception" position is specially designed to **s e c u r e** and **facilitate transfers**. Recommended by occupational therapists: perfectly suited for receiving patients independently or with minimal assistance. This position, directly accessible **with a single touch** thanks to **pre-programmed buttons**, promotes patient confidence and comfort while simplifying the work of caregivers, who can assist with movements without excessive effort.
A solution that combines **safety**, **ergonomics**, and well-being, serving the daily needs of teams and patients.



Emergency slope

The "Emergency Reverse Trendelenburg" position can be accessed **in a single step** using the **pre-programmed buttons.**
This function allows the patient to be quickly moved into the Reverse Trendelenburg position, which is essential in the event of discomfort or shock in order to **promote blood return** to the vital organs.
Designed to maximize **speed of action**, it ensures safe care while reducing the stress associated with critical situations.
Ergonomic and intuitive, this control provides caregivers with a **reliable** and **immediate tool**, ensuring efficiency, safety, and comfort during intervention.

Safety

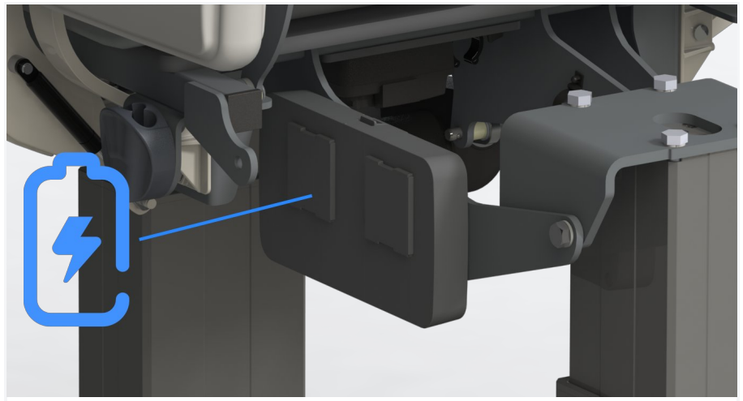

Integrated backup battery: guaranteed service continuity

To ensure maximum safety and continuity of care, our chair is equipped with a high-performance **backup battery** that automatically takes over in the event of a power failure. This autonomy allows caregivers to **maintain** all the chair's **essential functions**—position adjustments, backrest, legrest, variable height—without interruption, even in the event of a power outage.

This solution not only guarantees patient safety and comfort by preventing any unexpected blockages, but also offers **peace of mind** to healthcare teams by ensuring **smooth** and stress-free **management** of **emergency situations**. Thanks to this battery, care can continue without compromise, regardless of the environment or circumstances.



Manual CPR

Designed to ensure safety and responsiveness in all circumstances, the **backrest release system** is equipped with **two handles** (on both sides) that are easily accessible under the lying surface. Intuitively positioned, they allow caregivers to instantly release the actuator to **lower the backrest** or return it to a completely flat position in **an emergency**. This ergonomic design reduces complex maneuvers and ensures **rapid intervention**, thereby limiting patient stress and facilitating the work of medical teams. Reliable, simple, and secure, this device is an essential asset for **enhancing the quality of care** and the peace of mind of caregivers.



Immediate responsiveness in critical situations

Because certain situations require a rapid and uncompromising response, our chair can be equipped with optional **emergency Reverse Trendelenburg pedals**. Placed within easy reach of the caregiver, this control allows the chair to be instantly tilted into **the Reverse Trendelenburg position**, **without manual manipulation** or loss of time.

This device is particularly useful in cases of vagal discomfort, a drop in blood pressure, or a medical incident requiring **immediate response**. It allows cerebral perfusion to be restored quickly, while keeping the hands free to monitor or assist the patient.

Simple, robust, and intuitive, the Reverse Trendelenburg pedal meets the **safety** requirements of acute or prolonged care environments by enhancing the **capacity** of caregivers **to respond quickly**.

CHARACTERISTICS

Lying surface



Integrated USB connection for added convenience

Enhanced comfort and autonomy thanks to the **integrated USB connection**. To improve **patient well-being** during treatment, a USB port is integrated directly into the backrest. It allows smartphones, tablets, or other mobile devices to be easily recharged without having to leave the chair. This feature promotes **comfort**, **autonomy**, and **continuity of** the patient's **digital habits**.



Two widths to suit every body type.

Because **every patient is unique**, our chairs are available in **two seat widths**: 65 cm and 75 cm. This dual option allows us to meet the needs of **a variety of body types**, from standard sizes to larger patients, while ensuring optimal comfort without compromising on ergonomics or safety. A solution designed to adapt to all profiles, with a focus on **inclusivity** and **quality of care.**

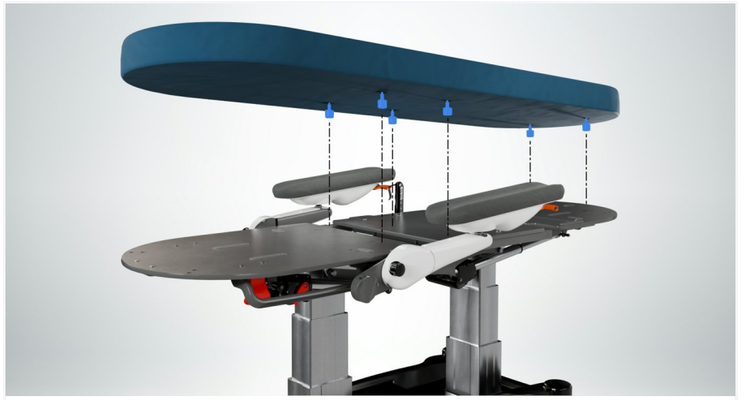

Removable and washable mattress cover

Covers **that can be removed via buttonholes** offer a practical and quick solution for maintenance. Thanks to this **ingenious system**, replacement can be done in a few simple steps, without complex disassembly or wasted time. Staff can thus ensure **impeccable hygiene** with minimal effort, while **extending the life of the equipment**. This **increase in efficiency** a n d **comfort** contributes to a safer and more pleasant environment for both caregivers and patients.

Technical specifications

AMB7-S06P24-S800

MULTIPURPOSE CARE CHAIR AMB7 CLAVIA FSP - WIDTH 65 - INDIVIDUAL BRAKING SYSTEM - COMFORT MATTRESS - TECH SIDERAILS

PACK - EQUIPMENT

Side Rails	Plastic with 2-position assistance, high for safety and low for easy access
Mattress	Removable comfort mattress
Equipment	2 Push bars / Adjustable headrest

WEIGHT - ECO-PERFORMANCE

Weight	99 kg

DIMENSIONS

Length	Chair position: 156 / Lying position: 202 cm
Width	78,5 cm
Length sleeping surface	202 cm
Width sleeping surface	65 cm
Variable height minimum	Sleeping surface without mattress: 47 cm
Variable height maximum	Sleeping surface without mattress: 85 cm
Ground Clearance	4 cm
Dimensions (cm)	Backrest 80 cm cm
Mattress thickness	10 cm
Side rails height	37 cm
Side rails length	94 cm
Side rails thickness	6 cm
Height of the push handle	Chair position: de 70 à 105 cm
Push bar length	40 cm
Push bar width	3 cm
Push bar diameter	3 cm

MATERIAL & COATING

Material Foam	Hight resilience foam
Foam HR density	35 kg/m3
Material Cover	PVC coated jersey
Frame	Plastic protection cover / Steel epoxy structure
Variable height	Steel column
Material	Plastic side rails

TYPE

Type of mattress	Standard Comfort
Class Mattress	Class 0
Variable height type	Electric
Type of engine	PI-Type
Type of brake	Centralized braking ssytem with 1 directional castor at the foot side

BASE

Type of footing	Castor - Simple roller
Wheels diameter	125 mm

MOBILITY

Type of battery	Lithium-Ion 2,5A (50 cycles)
Charging time	about 10 heure
Consumption at rest	0,5 (120/230V)
Consumption in function	on maximum connected 12A - on maximum battery 15A
Consumption in charge	1A

INCLINATIONS

Backrest	0 to 78°
Legrest	0 to 54°
Reverse Trendelenburg	10°
Trendelenburg	15°

SAFETY CHARGE

Maximum patient weight	185 kg
SWL	250 kg

CONFIGURATION

Configuration	Electrical variable height / Electric backward tilt function / Electric backrest with emergency cpr / Relève Jambes électrique
Number of IV pole support	2 slots on the seat

COLORS

Mattress filling	Range of colours Valencia or Urban

REGULATION

Medical device class	Class I
CE marking	CE
European regulation (UE 2017/745)	Yes

FIRE CLASSIFICATION

Mattress cover	M2 standard / M1 optional
Vegetable fibers	M1

ADDITIONAL INFORMATION

Comment	6 programmed positions: Welcome, Relax, Reverse Trend, Secured Trendelenburg position, CPR



OUR EXCLUSIVES

SOFT SOUND® · EASY MOV'® · TECH+ SIDE RAILS® · EASY CLEAN®

HIGHLIGHTS

- Tech side rails
- Configurable
- Pre-programmed functions
- Easy Clip
- Interchangeability
- Traceability

CE MD

Technical specifications

AMB7-S07P24-S800

MULTIPURPOSE CARE CHAIR AMB7 CLAVIA FSP - WIDTH 75 - INDIVIDUAL BRAKING SYSTEM - COMFORT MATTRESS - TECH SIDERAILS

PACK - EQUIPMENT

Side Rails	Plastic with 2-position assistance, high for safety and low for easy access
Mattress	Removable comfort mattress
Equipment	2 Push bars / Adjustable headrest

WEIGHT - ECO-PERFORMANCE

Weight	101 kg

DIMENSIONS

Length	Chair position: 156 / Lying position: 202 cm
Width	88,5 cm
Length sleeping surface	202 cm
Width sleeping surface	75 cm
Variable height minimum	Sleeping surface without mattress: 47 cm
Variable height maximum	Sleeping surface without mattress: 85 cm
Ground Clearance	4 cm
Dimensions (cm)	Backrest 80 cm cm
Mattress thickness	10 cm
Side rails height	37 cm
Side rails length	94 cm
Side rails thickness	6 cm
Height of the push handle	Chair position: de 70 à 105 cm
Push bar length	40 cm
Push bar width	3 cm
Push bar diameter	3 cm

MATERIAL & COATING

Material Foam	Hight resilience foam
Foam HR density	35 kg/m3
Material Cover	PVC coated jersey
Frame	Plastic protection cover / Steel epoxy structure
Variable height	Steel column
Material	Plastic side rails

TYPE

Type of mattress	Standard Comfort
Class Mattress	Class 0
Variable height type	Electric
Type of engine	PI-Type
Type of brake	Centralized braking ssytem with 1 directional castor at the foot side

BASE

Type of footing	Castor - Simple roller
Wheels diameter	125 mm

MOBILITY

Type of battery	Lithium-Ion 2,5A (50 cycles)
Charging time	about 10 heure
Consumption at rest	0,5 (120/230V)
Consumption in function	on maximum connected 12A - on maximum battery 15A
Consumption in charge	1A

INCLINATIONS

Backrest	0 to 78°
Legrest	0 to 54°
Reverse Trendelenburg	10°
Trendelenburg	15°

SAFETY CHARGE

Maximum patient weight	185 kg
SWL	250 kg

CONFIGURATION

Configuration	Electrical variable height / Electric backward tilt function / Electric backrest with emergency cpr / Electric legrest
Number of IV pole support	2 slots on the seat

COLORS

Mattress filling	Range of colours Valencia or Urban

REGULATION

Medical device class	Class I
CE marking	CE
European regulation (UE 2017/745)	Yes

FIRE CLASSIFICATION

Mattress cover	M2 (standard) / M1 (optional)
Vegetable fibers	M1

ADDITIONAL INFORMATION

Comment	6 programmed positions: Welcome, Relax, Reverse Trend, Secured Trendelenburg position, CPR



OUR EXCLUSIVES

SOFT SOUND® · EASY MOV'® · TECH+ SIDE RAILS® · EASY CLEAN®

HIGHLIGHTS

- Tech side rails
- Configurable
- Pre-programmed functions
- Easy Clip
- Interchangeability
- Traceability

CE MD



OPTIONS & ACCESSORIES

Options

ELECTRICAL CONTROLS

OPTION - EQUIPOTENTIAL CONNECTION

OPAM-70002

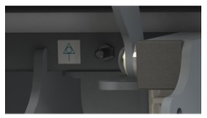

ELECTRICAL CONTROLS

ANTI-STATIC SYSTEM

OPAM-70003



ELECTRICAL CONTROLS

FLEX REMOTE CONTROL (SATELLITE) RIGHT (STANDARD) - WITHOUT REMOTE CONTROL

OPAM-70022



SECURITY

CABLE REEL

OPAM-70033



WHEEL OPTIONS

OPTION - 5TH WHEEL

OPAM-70004



WHEEL OPTIONS

DOUBLE RUNNING CASTORS Ø 150 MM WITH CENTRAL BRAKE

OPAM-70019



CONTAINER HOLDER

PAPER ROLL DISPENSER - NOT COMPATIBLE WITH HOLDER FOR OXYGEN CYLINDER (OPAM-70012)

OPAM-70006



CONTAINER HOLDER

HOOKS TO HOLD BAGS

OPAM-70008



HANDLES

OPTION PUSH BAR HEAD-END

OPAM-70044



COMFORT

SUPPORTS FOR MEAL SHELF

OPAM-70005



COMFORT

EMERGENCY FOOT SWITCH WITH EMERGENCY FOOT RELEASE ON BOTH SIDES

OPAM-70024



COMFORT

ELECTRIC FOOTREST WITH RETRACTABLE FOOT CUSHION

OPAM-70025



COMFORT

EXERCISE CRANKSET (OPAM-70025 COMPULSORY)

OPAM-70027



COMFORT

SET OF TECH PLUS SIDE RAILS WITH BUILT-IN CONTROLS - FOR AMB7 WIDTH 65

OPAM-70029



COMFORT

OPTION HIGH COMFORT MATTRESS - VISCOELASTIC - WIDTH 65 CM - HEIGHT 13 CM

OPAM-S567



COMFORT

OPTION HIGH COMFORT MATTRESS - VISCOELASTIC - WIDTH 75 CM - HEIGHT 13 CM

OPAM-S577



COMFORT

SET OF TECH PLUS SIDE RAILS WITH BUILT-IN CONTROLS - FOR AMB7 WIDTH 75

OPAM-70031



COMFORT

OPTION REMOVABLE CRYSTAL PROTECTION FOR LEG REST

OPAM-90002



Accessories

IV POLE

REMOVABLE IV POLE, 2-STAGE, 2 HOOKS

ACAM-90007



IV POLE

REMOVABLE IV POLE, 2-STAGE, 4 HOOKS

ACAM-90008



IV POLE

OPTION - REMOVABLE IV POLE, 2-STAGE, 2 HOOKS

OPAM-90007



IV POLE

OPTION REMOVABLE IV POLE, 2-STAGE, 4 HOOKS

OPAM-90008



COMFORT

REMOVABLE CRYSTAL PROTECTION FOR FOOTREST - FOR AMB7

ACAM-90000



COMFORT

HIGH COMFORT MATTRESS - VISCOELASTIC - WIDTH 65 CM - HEIGHT 13 CM

ACAM-S567



COMFORT

HIGH COMFORT MATTRESS - VISCOELASTIC - WIDTH 75 CM - HEIGHT 13 CM

ACAM-S577



COMFORT

REMOVABLE CRYSTAL PROTECTION FOR LEG REST

ACAM-90002



COMFORT

OPTION - REMOVABLE CRYSTAL PROTECTION FOR FOOTREST

OPAM-90000



SURFACE

MEAL SHELF 60x40 CM (OPAM-70005 COMPULSORY)

ACAM-90009



SURFACE

OPTION MEAL SHELF 60x40 CM

OPAM-90009



Preventive maintenance tailored to your needs

The maintenance of medical devices is not only a **technical obligation**, but also a **legal** and regulatory responsibility of the organisation.

It is based on:

- A clear policy
- Traceability procedures
- The use of compliant parts
- And staff training

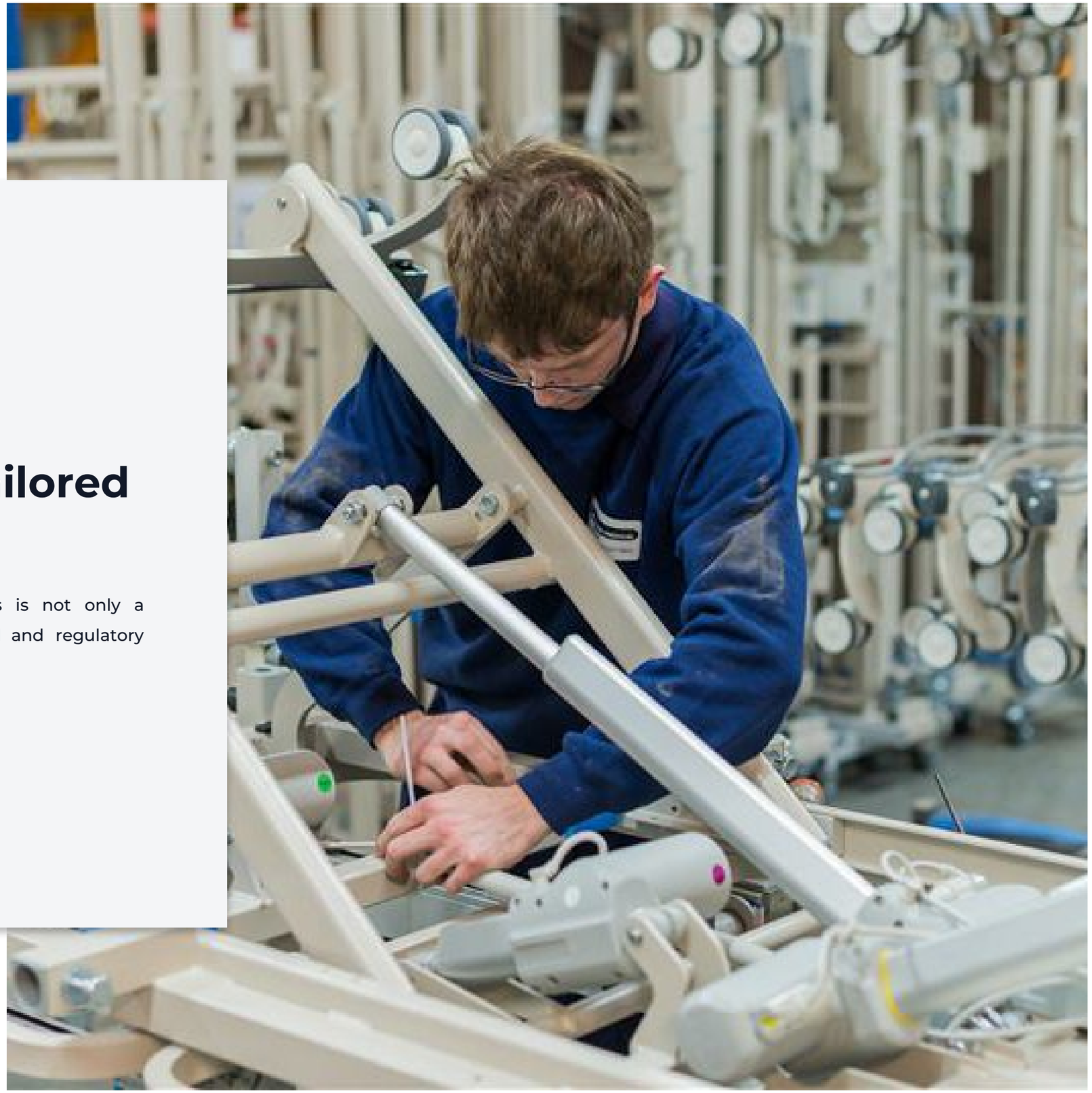

The advantages of preventive maintenance

THE BENEFITS OF REGULAR MAINTENANCE OF YOUR EQUIPMENT

- Improved performance: maximum fleet availability.
- Improved quality: a reliable and continuous service.
- Lower costs: reduced repair costs.
- Fewer breakdowns: continuity guaranteed.

EXTEND THE LIFESPAN OF YOUR EQUIPMENT & ENSURE SAFETY

Our maintenance programmes are designed to:
- Ensure your equipment performs to its full potential.
- Provide regular checks and reliable diagnostics.
- Safeguard the safety of patients, residents and carers.
- Maintain your organisation’s regulatory compliance.

A BUDGET UNDER CONTROL

Our maintenance solutions help you to:
- Plan your expenditure.
- Avoid unexpected costs.
- Optimise your investments with complete transparency.

CERTIFIED COMPONENTS FOR SUSTAINABLE VIABILITY

All our services are carried out using original parts that have been tested and approved, guaranteeing:
- Maximum safety when using your equipment.
- Strict compliance with regulatory standards.
- The durability and reliability of your beds, mattresses and accessories.

Our preventive maintenance services



A SINGLE POINT OF CONTACT FOR A COMPREHENSIVE SOLUTION

From pre-sales to after-sales, we support you every step of the way.

Through a **detailed analysis** of your needs, we provide **tailored technical support**, based on a **long-term** and **effective** partnership.

EXPERTS AT YOUR SIDE

Our technicians and engineers, who receive regular training in the latest innovations, guarantee you:
- A responsive, high-quality service.
- Professional installation of your equipment.
- Comprehensive training for your teams, delivered directly on-site.

OUR TECHNICIANS CARRY OUT A FULL INSPECTION

- Mechanical inspection: assembly, joints, brakes, locking mechanisms.
- Electrical inspection: components, controls, sensors.
- Safety features: barriers, locking systems, protective devices.
- Lubrication: re-greasing of all pivot points.
- Electrical tests: carried out in accordance with current standards.

Each operation (inspection, adjustment, replacement) is recorded in the technician’s maintenance report.

RENOVATION OF THE PARK

Following the visit, our preventive maintenance team will email you the **maintenance report** completed for each piece of equipment.
The **service reports** are sent to your HAcare contact, who will draw up the necessary quotes for repairs or replacements.

This provides you with **comprehensive** and **transparent** tracking of the **maintenance** of your equipment fleet.

The result: a clear and traceable process that guarantees the safety, compliance and availability of your equipment. Translated with DeepL.com (free version)

BMB MEDICAL

ZAC de Fourquevaux, 100 avenue du Formans
01600 - TRÉVOUX, FRANCE

Tél +33 (0)4 74 08 71 71
export@hacare.com

Sales in the French Overseas Departments and Communities (DROM-COM)
f.milloux@hacare.com
06 25 83 86 00

International Export Department
export@hacare.com
+33 (0)4 74 08 71 71

Sales assistant
export@hacare.com
+33 (0)4 74 08 71 71

HAcare

MEDICAL

1860

MKT-26-PO-HOP-AMB-SA-FSA-AMFSP-EN
2026