HA care MEDICAL 1860

HOSPITAL

ALLIBERT MEDICAL



ISOLATION CARTS ISOLATION CART - MM1 (BOTTOM MOVING RAIL)

EASY CLEAN®

EASY CLIP®

Hospital Logistics - Storage

greenly 2024 Or Climate Strategy Rating TOP 5%

MKT-26-PO-HOP-LH-STO-RDS-MMRMB-EN 21/11/2026

Summary

HAcare, specialist in medical devices since 1860. 3

HAcare Group's eco-responsible commitments 4

Choose the circular economy 5

Recyclable materials 6

Certifications 7

Isolation carts Hospital Storage 8

Our exclusives

- Easy CLEAN 10
- Easy Clip 11

Highlights

- Optimizing space (Configurable) 13
- Choosing components for custom-made medical furniture (Configurable) 14

Characteristics

- Dedicated configurations 16
- COMPOSANTS : Bac à lèvres ..... 17 - 18
- COMPOSANTS: Étagères ..... 19 - 20

Technical specifications 21

Preventive maintenance tailored to your needs 23

The advantages of preventive maintenance 24

Our preventive maintenance services 25



HAcare, specialist in medical devices since 1860.

At HAcare, we design, manufacture and distribute medical devices and innovative, durable medical furniture solutions designed to improve the daily lives of patients and healthcare professionals alike.

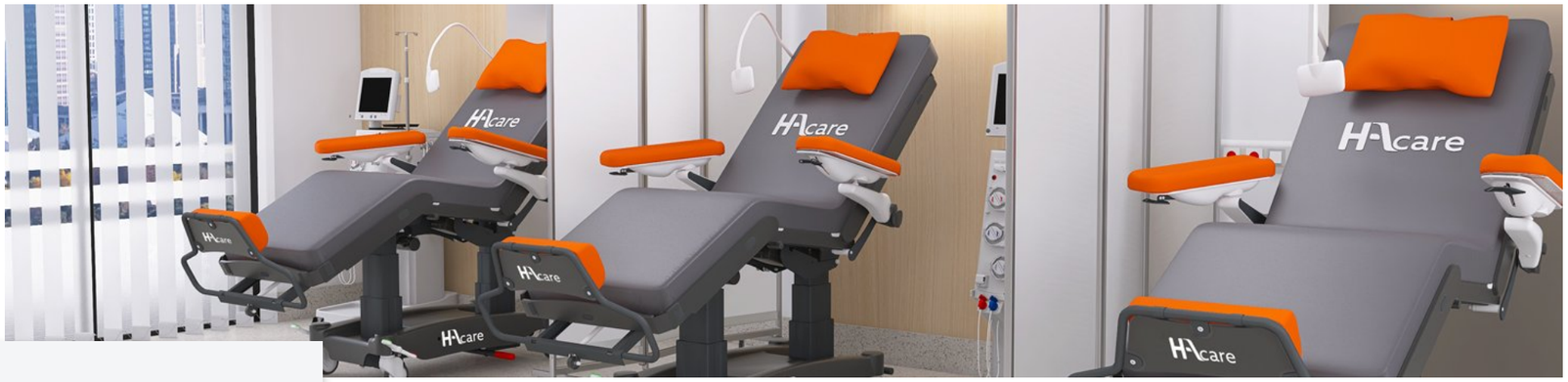









The HAcare Group's eco-responsible commitments

The HAcare group commits to an **eco-responsible industrial orientation**

In its sustainable development strategy, the HAcare group has defined a list of **6 commitments** that guide its **actions and decisions** since the group's creation and for the years to come.

Indicators have been set up for each commitment.

Our 6 commitments

- Made in France production
- The use of renewable resources
- Integrating the circular economy into all new product developments
- Responsible purchasing (supplier quality monitoring)
- Daily actions to respect and protect the environment
- Combating RSI and noise pollution through our products

Choose the circular economy



HAcare finished products can be recycled through a recovery circuit at the end customer's premises, for recycling with our partner supplier. As wood cannot be recycled ad infinitum because its fibers become too small or exhausted, wood waste is recovered and transformed into green energy.



The plant fiber boards used in the manufacture of HAcare products are 100% reclaimed wood. Each HAcare finished product bears an index revealing the proportion of plant fiber contained.



Recycling is the practice of recovering used materials from the waste stream, then incorporating these same materials into the manufacturing process. Each HAcare finished product carries an index revealing the proportion of recycled material it contains.



Recyclable materials

HAcare finished products are 95% recyclable. For example, the HAcare medical bed is entirely recyclable, except for the wheels and motors. Each bed can be dismantled to recover each material separately: plant fiber, metal, plastic.

PLANT FIBER



Recycled wood

The plant fiber boards used in the manufacture of HAcare Group products are:

100% reused wood

Reuse is one of the environmentally friendly processes. It involves, for example, leftovers from wood-processing companies (e.g. sawmill scraps, production offcuts...). But also by-products from activities such as sustainable forest management and slope maintenance.

100% FSC-certified wood

Recyclable with a partner supplier who, on a worldwide exclusive basis and since 2021, recycles MDF and HDF panels.No water consumption, nor green energy **biomass**.

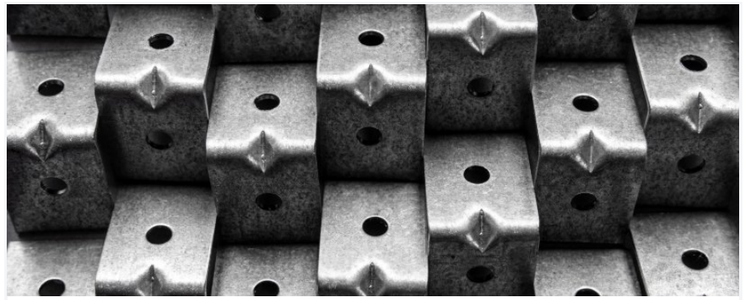

The metal

All metal components are **recyclable** and reusable, **infinitely**. Once the metal has been sorted, it is compressed, crushed, rolled and melted. It is then remolded into coils, bars or wire for reuse. This process can be endless!

Metal recycling has **many advantages**. It conserves natural resources by reducing the need for virgin materials, cuts energy consumption and reduces **greenhouse gas emissions**.



Recycled plastic

At recycling plants, waste (re) becomes a **raw material** through various processes: grinding, micronization, regeneration of plastics.

The recycled plastic will then be resold to **plasturgy** manufacturers in the form of **flakes**, powder or even **granules**.

Certifications



MANAGEMENT AND CUSTOMER SATISFACTION
ISO 9001

MEDICAL DEVICE
ISO 13485

GOLD | Top 5%
ecovadis
Sustainability Rating
MAY 2026

greenly
2024
Or
Climate Strategy Rating
TOP 5%

ISOLATION CARTS HOSPITAL

Storage

Isolation Cart - MM1 (BOTTOM MOVING RAIL)





OUR EXCLUSIVES

OUR EXCLUSIVES

Easy CLEAN

In a hospital environment where hygiene is an absolute imperative, every minute spent cleaning counts. Nursing staff are faced with the need to ensure rigorous disinfection while maintaining a fast pace of work. The EasyClean® solution meets this challenge by facilitating cleaning. Hygiene protocols are respected without compromise, while lightening the staff's workload. The result: less effort, less wasted time, and enhanced safety for both patient and caregiver.EasyClean® guarantees a cleaner, safer and more ergonomic environment, serving quality of care and comfort in the workplace..

EASY CLEAN®

Easy cleaning

Tool-free disassembly for rapid integral cleaning, avoids retention for perfect hygiene and real time saving for nursing staff.



OUR EXCLUSIVES

Easy Clip

In a care environment where every second counts and space is often limited, optimizing the care surface is becoming a strategic issue to improve the efficiency of care teams and patient safety.The EasyClip® concept has been designed to meet these constraints with an approach that is both ergonomic, intuitive and modular..

Optimizing the treatment surface

The attachment of accessories is done in a single gesture, without any tools, offering immediate time saving. The accessories, entirely modular, adapt to every need and every care situation, for smoother and efficient work every day..





HIGHLIGHTS

HIGHLIGHTS

Optimizing space (Configurable)



HACARE medical furniture adapts to every use, thanks to a wide choiceof modular components. It optimizes, secures care and offers great capacity for storage. Compatible with drawers, standardized lip trays and shelves,it enables clear, efficient organization. Ideal for combiningjoined drawers and standard shelves, it ensures a practical, scalable and high-performance workspace on a daily basis, meeting the needs of care teams.

HIGHLIGHTS

Choosing components for custom-made medical furniture (Configurable)

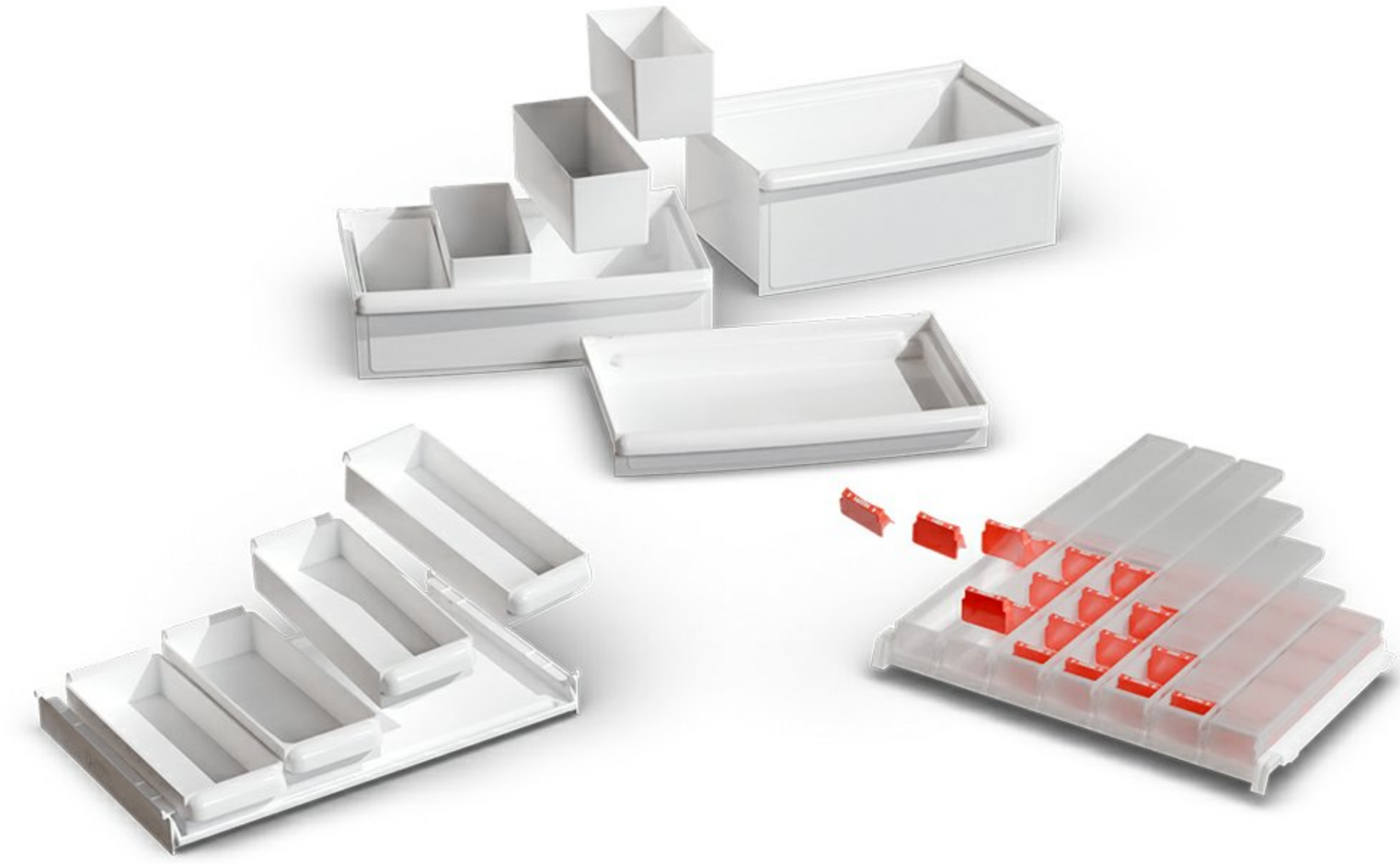

Configure your medical furniture according to your needs thanks to a wide choice of modular components. Create a tailor-made solution, perfectly adapted to your daily uses. Each element is designed to optimize your organization, your work comfort and the efficiency of your care, while guaranteeing optimal ergonomics. Complete customization for a upgradeable furniture durable and perfectly matched to your department's requirements.



CHARACTERISTICS

CHARACTERISTICS

Dedicated configurations



The 2-rail mobile cart

This modular cart adapts easily to all environments and needs. Its tubular structure in volcanic black epoxy-lacquered steel combines robustness and elegance, while facilitating disinfection. Highly maneuverable and secure, it is equipped with 4 swivel castors in thermoplastic, including 2 with brakes, for controlled mobility and stable positioning in any situation.



The mobile low isolation cart

Lightweight, modulable and evolutive, it adapts to all organizations, offering multiple configurations as required. The side rails enable the integration of numerous accessories and components, optimizing space and efficiency on a daily basis. Thanks to the EasyClean® system, the equipment disinfects quickly between each patient, guaranteeing hygiene, safety and fluidity in care gestures, while facilitating the work of care teams.

COMPOSANTS : Bac à lèvres

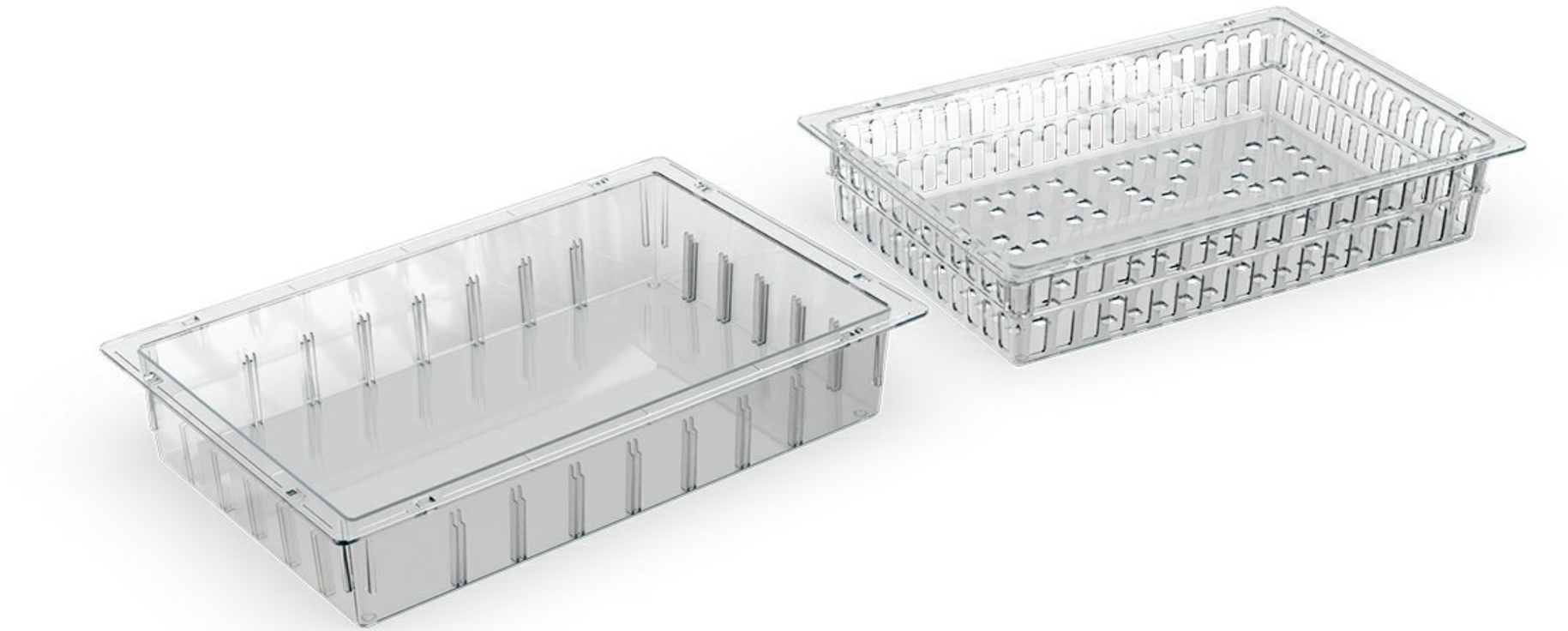

The lip tray, a universal and standardized storage method, features a rear groove for suspension, and thus creates an isolated zone limiting liquid contamination. Transparent for quick spotting of contents, it can be openworked for added lightness. It adapts to all structures and is easily cleaned, offering a practical, hygienic and functional solution for healthcare organization and safety. Available in 3 heights to optimize storage.

CHARACTERISTICS

COMPOSANTS : Bac à lèvres

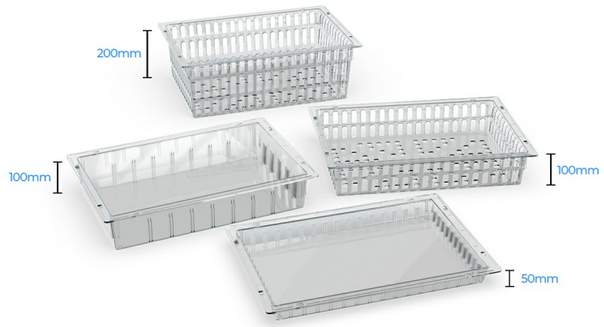

Choosing a lip tray

The full or perforated, transparent lip trays offer a secure and hygienic storage solution for medical furniture. their closed design limits the risk of liquid contamination while allowing quick viewing of contents. Easy to clean, they ensure durability and practicality for everyday use. Adaptable to all structures, it optimizes the organization of instruments and consumables, while facilitating the work of care teams. Lightweight and robust, it combines safety, ergonomics and efficiency. Available in 3 heights to optimize storage.

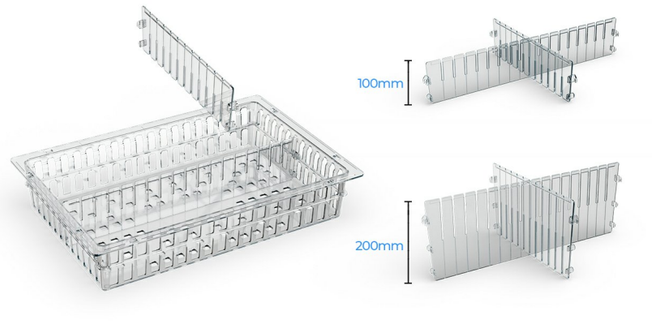

Lips tray combs

Freely compose the interior layout of the lip tray according to your needs thanks to separation combs that isolate each care element for greater safety. A flexible and scalable design that optimizes space.Many models to create your own organization.



Label holders and labels

Label holders on medical furniture drawers facilitate rapid and acurate identification of contents, reducing errors and optimizing care organization. They enable clear identification of drugs, medical devices or supplies, improving productivity and workflow for teams. Adaptable and modular, they contribute to a structured and secure care environment, while simplifying the day-to-day management of materials and reinforcing the efficiency and safety of interventions.

COMPOSANTS: Étagères



The modular shelf offers practical and accessible rangeement for medical furniture. Designed to optimize the organization of instruments and consumables, it facilitates the daily work of healthcare teams. Robust and stable, it supports a variety of equipment while remaining easy to clean, guaranteeing hygiene and durability. Adaptable to different configurations, it enables efficientstructuring of the care space, offering quick access to essential equipment and contributing to a fluid, safe and ergonomic working environment.

CHARACTERISTICS

COMPOSANTS: Étagères

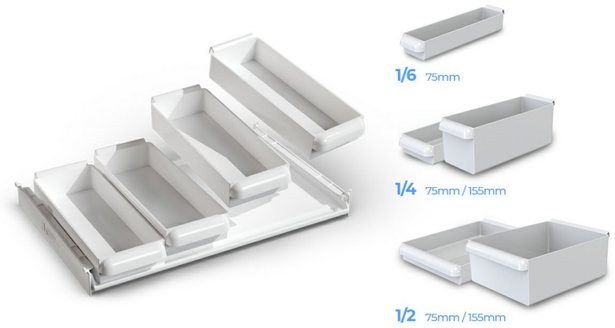

Separation bins

Medical furniture adapts to every care organization thanks to its customizable configurations. Choose from 3 drawer heights and freely compose the interior layout to suit your needs with the separator bins. A flexible and evolutive design that allows you to optimize space, improve ergonomics and make every care station more functional on a daily basis.

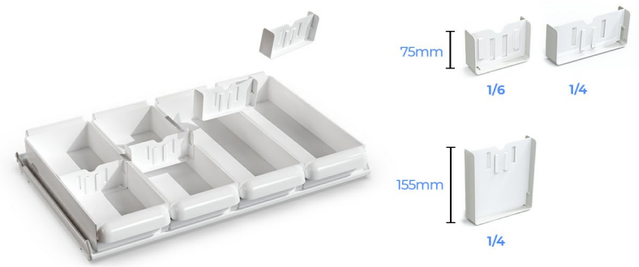

Separators

Freely compose the interior layout to suit your needs with divider bins and separators, separator combs, subdivision boxes that isolate each care element for greater safety. A flexible and evolutive design that allows optimizing space, improving ergonomics and making each care station more functional on a daily basis.

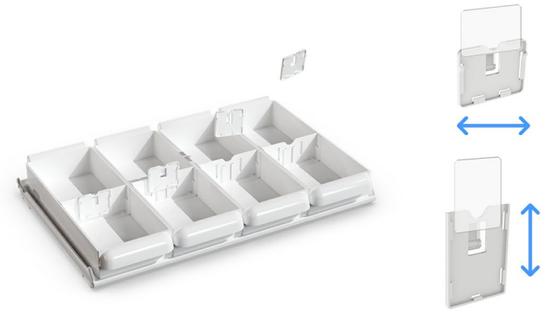

Label holders and labels

Label holders on medical furniture drawers facilitate rapid and acurate identification of contents, reducing errors and optimizing care organization. They enable clear identification of drugs, medical devices or supplies, improving productivity and workflow for teams. Adaptable and modular, they contribute to a structured and secure care environment, while simplifying the day-to-day management of materials and reinforcing the efficiency and safety of interventions.

Technical specifications

PP-M270814V1

LOW MOBILE UNIT FOR QUARANTINE

WEIGHT - ECO-PERFORMANCE

Weight bare structure	7,5 kg
Total Weight - Pack	12 kg

DIMENSIONS

Width	47 cm
Depth	60 cm
Height	107 cm

TYPE

Type of brake	Individual brake

MATERIAL & COATING

Frame	Welded steel - Volcanic Black Epoxy
Wheels	Thermoplastic rubber, grey non-marking

BASE

Type of footing	4 swivel wheels with 2 braked at the front
Wheels diameter	125 mm

CONFIGURATION

Configuration	2 rails

COLORS

Box	Volcanic Black

FIRE CLASSIFICATION

Plastic	M2

COMPOSITION

1 white drawer height 075 - 1 white drawer height 155



OUR EXCLUSIVES

EASY CLEAN®

EASY CLIP®

HIGHLIGHTS

- Configurable
- Configurable

Technical specifications

MO-M270814

BOTTOM MOBILE RAIL - 2 RAILS - VOLCANIC BLACK

WEIGHT - ECO-PERFORMANCE

Weight bare structure	7,5 kg

DIMENSIONS

Width	47 cm
Depth	60 cm
Height	107 cm

TYPE

Type of brake	Individual brake

MATERIAL & COATING

Frame	Welded steel - Volcanic Black Epoxy
Wheels	Thermoplastic rubber, grey non-marking

BASE

Type of footing	4 swivel wheels with 2 braked at the front
Wheels diameter	75 mm

CONFIGURATION

Configuration	2 rails

COLORS

Box	Volcanic Black



OUR EXCLUSIVES

EASY CLEAN®

EASY CLIP®

HIGHLIGHTS

- Configurable
- Configurable

Preventive maintenance tailored to your needs

The maintenance of medical devices is not only a **technical obligation**, but also a **legal** and regulatory responsibility of the organisation.

It is based on:

- A clear policy
- Traceability procedures
- The use of compliant parts
- And staff training

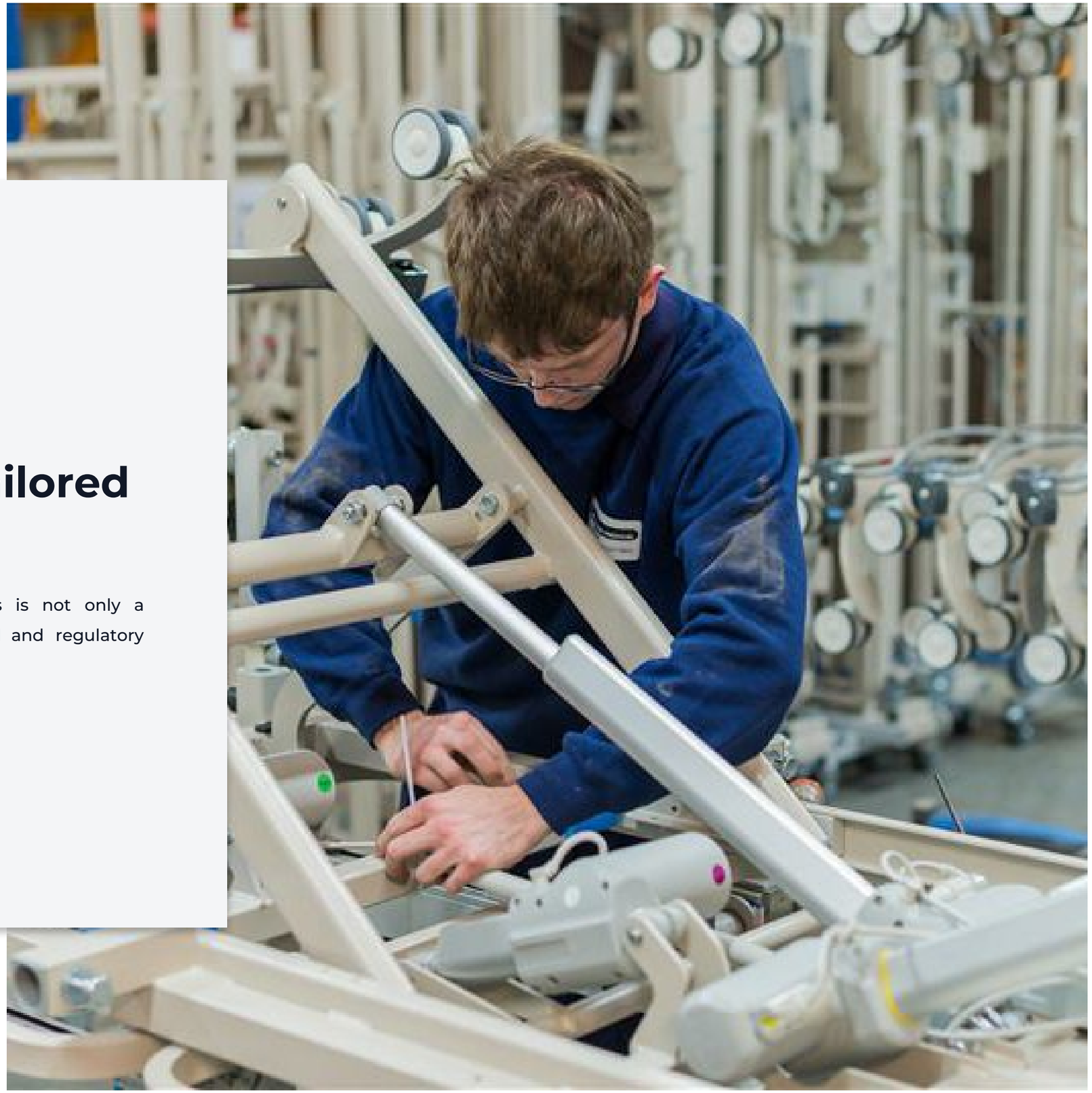

The advantages of preventive maintenance

THE BENEFITS OF REGULAR MAINTENANCE OF YOUR EQUIPMENT

- Improved performance: maximum fleet availability.
- Improved quality: a reliable and continuous service.
- Lower costs: reduced repair costs.
- Fewer breakdowns: continuity guaranteed.

EXTEND THE LIFESPAN OF YOUR EQUIPMENT & ENSURE SAFETY

Our maintenance programmes are designed to:
- Ensure your equipment performs to its full potential.
- Provide regular checks and reliable diagnostics.
- Safeguard the safety of patients, residents and carers.
- Maintain your organisation’s regulatory compliance.

A BUDGET UNDER CONTROL

Our maintenance solutions help you to:
- Plan your expenditure.
- Avoid unexpected costs.
- Optimise your investments with complete transparency.

CERTIFIED COMPONENTS FOR SUSTAINABLE VIABILITY

All our services are carried out using original parts that have been tested and approved, guaranteeing:
- Maximum safety when using your equipment.
- Strict compliance with regulatory standards.
- The durability and reliability of your beds, mattresses and accessories.

Our preventive maintenance services



A SINGLE POINT OF CONTACT FOR A COMPREHENSIVE SOLUTION

From pre-sales to after-sales, we support you every step of the way.

Through a **detailed analysis** of your needs, we provide **tailored technical support**, based on a **long-term** and **effective** partnership.

EXPERTS AT YOUR SIDE

Our technicians and engineers, who receive regular training in the latest innovations, guarantee you:
- A responsive, high-quality service.
- Professional installation of your equipment.
- Comprehensive training for your teams, delivered directly on-site.

OUR TECHNICIANS CARRY OUT A FULL INSPECTION

- Mechanical inspection: assembly, joints, brakes, locking mechanisms.
- Electrical inspection: components, controls, sensors.
- Safety features: barriers, locking systems, protective devices.
- Lubrication: re-greasing of all pivot points.
- Electrical tests: carried out in accordance with current standards.

Each operation (inspection, adjustment, replacement) is recorded in the technician’s maintenance report.

RENOVATION OF THE PARK

Following the visit, our preventive maintenance team will email you the **maintenance report** completed for each piece of equipment.
The **service reports** are sent to your HAcare contact, who will draw up the necessary quotes for repairs or replacements.

This provides you with **comprehensive** and **transparent** tracking of the **maintenance** of your equipment fleet.

The result: a clear and traceable process that guarantees the safety, compliance and availability of your equipment. Translated with DeepL.com (free version)

ALLIBERT MÉDICAL

ZAC de Fourquevaux, 100 avenue du Formans
01600 - TRÉVOUX, FRANCE

Tél +33 (0)4 74 08 71 71
export@hacare.com

Sales in the French Overseas Departments and Communities (DROM-COM)
f.milloux@hacare.com
06 25 83 86 00

International Export Department
export@hacare.com
+33 (0)4 74 08 71 71

Sales assistant
export@hacare.com
+33 (0)4 74 08 71 71

HAcare

MEDICAL

1860

MKT-26-PO-HOP-LH-STO-RDS-MMRMB-EN
2026